LINET

Instructions for Use and Technical Description

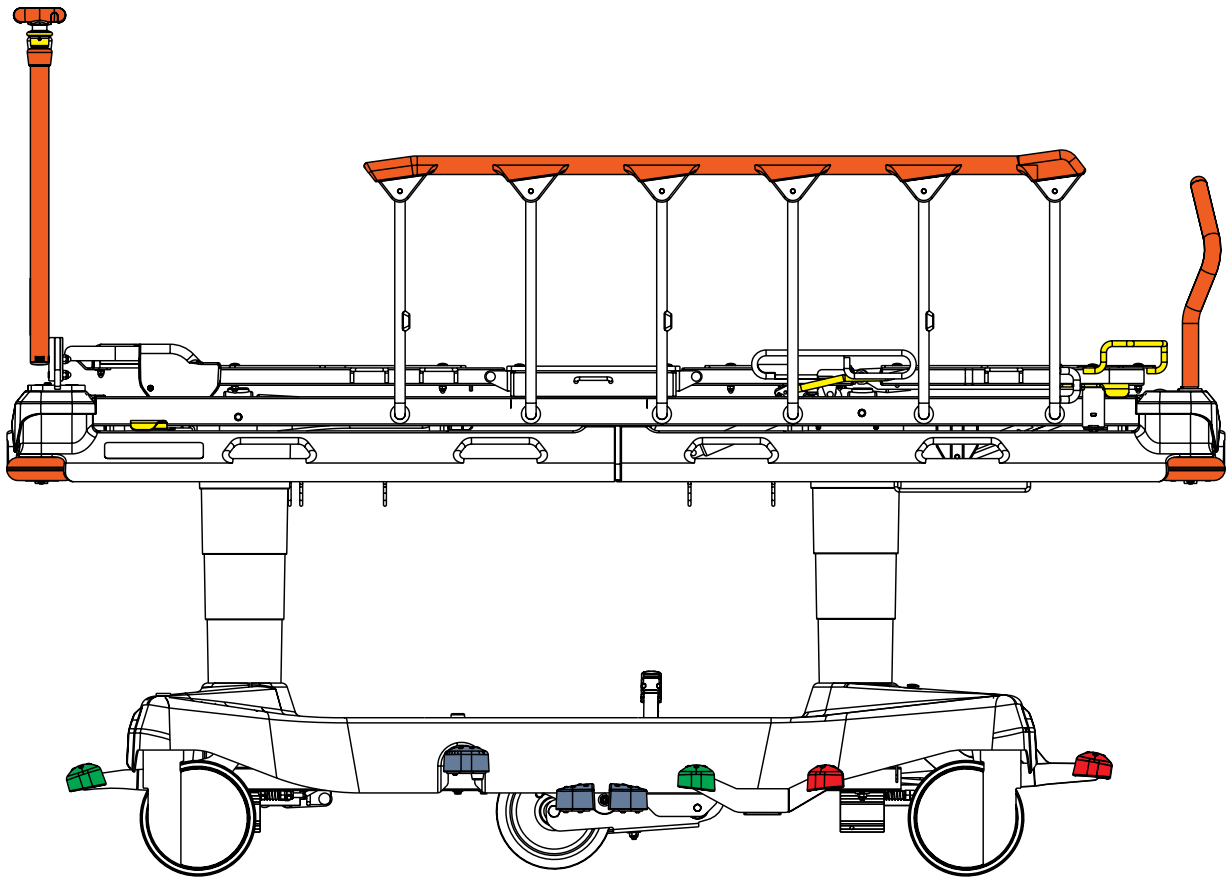

Sprint 100

Universal Transport Stretcher

CE

D9U001ES1-0101

Version: 08

Publication Date: 2021-08

Manufacturer:

L I N E T spol. s r.o.
Želevčice 5
274 01 Slaný

Tel.: +420 312 576 111
Fax: +420 312 522 668

E-mail: info@linet.cz
http://www.linet.com
Service department: service@linetgroup.com

Sprint 100
Universal Transport Stretcher

Author: L I N E T, s.r.o.
Related links: www.linet.com

D9U001ES1-0101
Version: 08
Publication Date: 2021-08

Copyright © L I N E T, s.r.o., 2021
Translation © L I N E T, 2021
All rights reserved.

All trademarks and brands are the property of the appropriate owners. The manufacturer reserves the right to changes in the contents of the instructions for use that relate to the product´s technical regulations. It is for this reason that the contents of the instructions for use may indicate differences from the current manufacture of the product. Reproduction, also excerpts, only with prior permission of the publisher. Subject to changes due to technical developments. All technical data are rated data and are subject to construction and manufacturing tolerances.

Table of Contents

1 Symbols and Definitions 4
1.1 Warning Notices 4
1.1.1 Types of Warning Notices 4
1.1.2 Structure of Warning Notices 4
1.2 Instructions 4
1.3 Lists 4
1.4 Symbols on the Package 5
1.5 Symbols on the Bed 6
1.6 Symbols on the Mattress 9
1.7 Serial Label with UDI 10
1.8 Definitions 11
1.9 Abbreviations 11
2 Safety Instructions 12
3 Intended use (Sprint 100) 14
3.1 User population 14
3.2 Contraindications 14
3.3 Operator 14
4 Intended use (Sprint 100 mattresses) 14
4.1 User population 14
4.2 Contraindications 14
4.3 Operator 14
5 Product Description 15
6 Technical Specification 17
6.1 Identification of Applied Parts (Type B) 17
6.2 Mechanical Specifications 17
6.2.1 Sprint 100 with Standard Mattress Support Platform 17
6.2.2 Sprint 100 with Wide Mattress Support Platform 18
6.3 Environment Conditions (Sprint 100) 19
7 Use and Storage Conditions 19
8 Scope of Delivery and Bed Variants 20
8.1 Delivery 20
8.2 Scope of Delivery 20
8.3 Sprint 100 Variants 20
9 Putting into Service 21
9.1 Mattress Support Platform 22
9.2 Potential Interconnection (optional) 23
9.3 Before Use 23
9.4 Transport 23
10 Manipulation 25
10.1 Collapsible Siderails 26
10.2 Castor Control 27
10.2.1 Braked Bed 28
10.2.2 Forward Movement (Steering) 28
10.2.3 Unrestricted Movement 29
10.3 Bed Positioning 30
10.3.1 Backrest 30
10.3.2 Thighrest (only 4-part Mattress Support Platform) 31
10.3.3 Calfrest (only 4-part Mattress Support Platform) 32
10.3.4 Lifting 33
10.3.5 Lowering 34
10.3.6 Trendelenburg Position 35
10.3.7 Anti-Trendelenburg Tilt 36
10.3.8 Cardiac Chair Position (only 4-part Mattress Support Platform) 37
10.4 CPR Backrest Release 38
10.4.1 The 2-part Mattress Support Platform 38
10.4.2 The 4-part Mattress Support Platform 39
11 Equipment 40
11.1 Accessory Holders (optional) 40
11.2 Accessory Rail with plastic hooks 41
11.3 DIN Rail 42
11.4 Undercarriage Cover 43
11.5 FlexiDrive (Sprung Retractable Fifth Castor) 43
11.6 IV&Drive (Foldable Infusion Stands) 44
11.7 Handles 45
11.7.1 Removable handles 45
11.7.2 Foldable handles 46
11.7.3 Fixed handles 47
11.8 Angle Indicators (optional) 47
11.9 Examination with C-arm (in-bed fluoroscopy) 48
12 Mattress 49
12.1 Anti-slip coating 50
12.2 Installation of Passive Mattress 50
12.2.1 Straps with side release buckles 50
12.3 Mattresses Specifications 52
12.3.1 Sprint 100 with Standard Mattress Support Platform 52
12.3.2 Sprint 100 with Wide Mattress Support Platform 53
12.4 Cleaning of Passive Mattress 54
12.4.1 General Guidance 54
12.4.2 Routine Cleaning and Disinfection 55
12.4.3 Complete Cleaning and Disinfection 55
12.4.4 Mattress Core 55
13 Accessories 56
13.1 Infusion Stand 57
13.2 Telescopic Infusion Stand 58
13.3 Chart Holder 58
13.4 Monitor Shelf 59
13.5 Paper Roll Holder 60
13.6 Storage Space 60
13.7 Oxygen Bottle Holder 61
13.8 X-Ray Cassette Holder (optional) 62
13.8.1 Instructions for X-Ray Examination 67
14 Cleaning/Disinfection 69
14.1 Cleaning (Sprint 100) 70
14.1.1 Cleaning before Changing Patients 70
14.1.2 Daily Cleaning 70
14.1.3 Complete Cleaning and Disinfection 71
15 Troubleshooting 71
16 Maintenance 72
16.1 Regular maintenance 72
16.2 Spare Parts 72
16.3 Safety Technical Checks 72
17 Disposal 73
17.1 Environment Protection 73
17.2 Disposal 73
17.2.1 Within Europe 73
17.2.2 Outside Europe 73
18 Warranty 73
19 Standards and Regulations 73

1 Symbols and Definitions

1.1 Warning Notices

1.1.1 Types of Warning Notices

Warning notices are differentiated by the type of danger using the following key words:

► **CAUTION** warns about the risk of material damage.
► **WARNING** warns about the risk of physical injury.
► **DANGER** warns about the risk of fatal injury.

1.1.2 Structure of Warning Notices



SIGNAL WORDS!
Type and source of danger!
► Measures to avoid the danger.

1.2 Instructions

Structure of instructions:

► Perform this step.
Results, if necessary.

1.3 Lists

Structure of bulleted lists:

- List level 1
  - List level 2
    - List level 3

1.4 Symbols on the Package

	FRAGILE, HANDLE WITH CARE
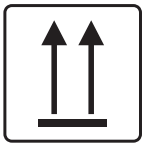	THIS WAY UP
	KEEP DRY (PROTECT FROM HUMIDITY)
	PAPER RECYCLING SYMBOL
	DO NOT USE HAND TRUCK HERE
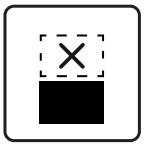	DO NOT STACK DURING STORAGE

1.5 Symbols on the Bed

	READ INSTRUCTIONS FOR USE
	SAFE WORKING LOAD
	WARNING AGAINST CRUSHING OR TRAPPING
	JACK FOR ATTACHMENT OF CONDUCTOR FOR POTENTIAL EQUALISATION
	POSSIBLE RISK
	APPLIED PARTS TYPE **B**
	ONLY SUITABLE FOR INDOOR USE
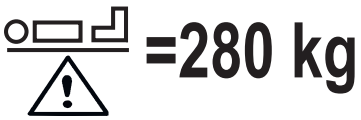	MAXIMUM WEIGHT OF PATIENT
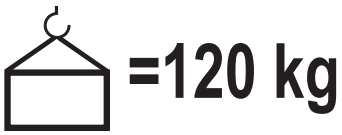	WEIGHT OF BED (depending on configuration)
	**CE** MARKING
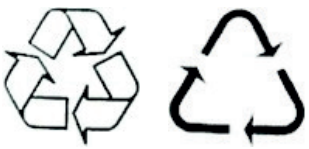	RECYCLING SYMBOLS
	DO NOT POLLUTE THE ENVIRONMENT

	MAXIMUM LOAD OF THE MONITOR SHELF 15 KG PLACE MONITOR ON THIS SIDE OF THE MONITOR SHELF
	MAXIMUM LOAD OF THE MONITOR SHELF 15 KG DO NOT PLACE MONITOR ON THIS SIDE OF THE MONITOR SHELF
	INSTRUCTION FOR PLACEMENT OF THE MONITOR SHELF (**L**=LEFT, **R**=RIGHT)
	MAXIMUM LOAD OF ONE HOOK 5 KG FOLD THE MARKED FOLDABLE INFUSION STAND AS THE FIRST ONE
	MAXIMUM LOAD OF ONE HOOK 5 KG FOLD THE MARKED FOLDABLE INFUSION STAND AS THE SECOND ONE
	MANUFACTURER
	MANUFACTURING DATE
	REFERENCE NUMBER (PRODUCT TYPE DEPENDING ON CONFIGURATION)
	SERIAL NUMBER

MD	MEDICAL DEVICE (COMPATIBLE WITH MEDICAL DEVICE REGULATION)
	WEEE SYMBOL (RECYCLE AS ELECTRONIC WASTE, DO NOT PUT INTO THE HOUSEHOLD WASTE)
LOT	BATCH NUMBER (ACCESSORIES)
UDI	UNIQUE DEVICE IDENTIFICATION (FOR MEDICAL DEVICES)
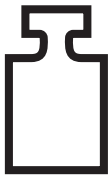	MASS OF MOBILE HOSPITAL BED (MASS OF EMPTY BED + SAFE WORKING LOAD)



Fig. Warning, read instructions for use

1.6 Symbols on the Mattress

	READ INSTRUCTIONS FOR USE
CE	**CE** MARKING
BS 7175 5 MEDIUM HAZARD	COVER MATERIALS ARE FIRE RESISTANT TO BS7175, SOURCE 0, 1 AND 5
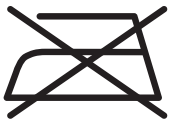	DO NOT IRON
	DO NOT USE PHENOL
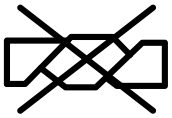	DO NOT WRING
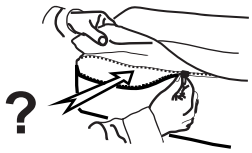	REGULARLY INSPECT THE INSIDE OF THE COVER FOR CONTAMINATION
	MACHINE WASH AT MAX. 71°C FOR 3 MINUTES
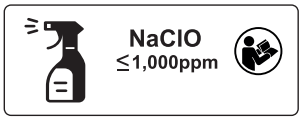	DISINFECT USING SOLUTION CONTAINING LESS THAN 1000 ppm OF CHLORINE (REFER TO INSTRUCTIONS FOR USE)
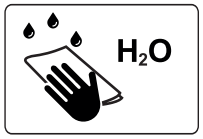	RINSE WITH WATER

	TUMBLE DRY ON LOW HEAT SETTING (MAX. 60°C)
	MATTRESS FOOT PART
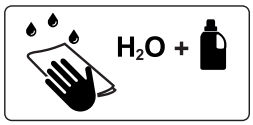	HANDWASH WITH DETERGENT (INITIAL TEMPERATURE OF HOT WATER SHOULD NOT EXCEED 50°C)

1.7 Serial Label with UDI

There is a serial label of the bed under the Backrest.

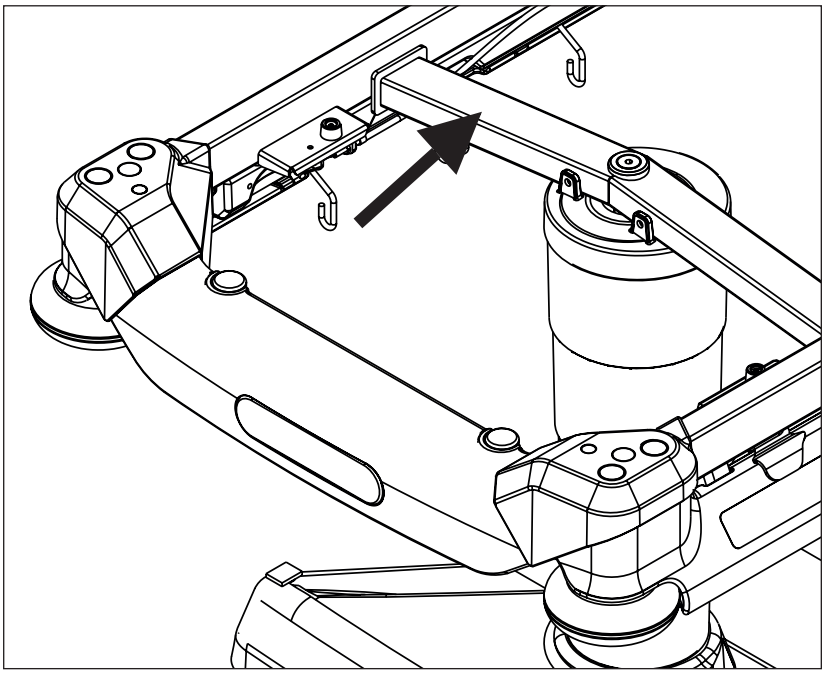

Fig. Position of serial label on the bed

1.8 Definitions

Basic Bed Configuration	the pricelist model configuration, not including a mattress
Bed Weight	The value depends on the product configuration, accessories or customer adjustments.
Clearance of Undercarriage	the height from the floor to the lowest point of the undercarriage between the castors, for the manipulation of accessories under a braked bed in the standard position
Reference number	Reference number depends on configuration.
Safe Working Load	the highest allowable load on the bed (patient, mattress, accessories and the load supported by those accessories)
Siderail Height	the height of the upper crossbar or the edges of the siderails (not the highest point of the siderail controls) from the patient surface
Standard Bed Position	- The height of the mattress support platform with regard to the floor is 56,5 cm (2-part Mattress Support Platform) or 55,5 cm (4-part Mattress Support Platform) - The Mattress Support Platform, including the individual parts, has to be in a horizontal (level - 0°) position. - The siderails are always locked in the upper position.
Adult	Patient having a physical size equal to or more than 146 cm, a mass equal to or more than 40 kg and a body mass index (BMI) equal to or more than 17 (according to IEC 60601-2-52).
Mass of mobile hospital bed	Sum of empty bed mass and Safe Working Load.

1.9 Abbreviations

CE	European Conformity
CPR	Cardiopulmonary Resuscitation
dBA	Sound Intensity Unit
CUC	Configuration number
HPL	High Pressure Laminate
ICU	Intensive Care Unit
IV	Intravenous
ON	Activation
OFF	Deactivation
ppm	parts per million, millionth (1000 ppm = 0,1%)
REF	Reference Number (product type depending on configuration)
SN	Serial Number
SWL	Safe Working Load
UDI	Unique Device Identification (for medical devices)
WEEE	Waste Electrical and Electronic Equipment

2 Safety Instructions



WARNING!
Staff expert assessment is needed to consider all individual cases of contraindications!



WARNING!
Risk of trapping or squeezing because of patient´s body constitution disproportionate to the size of mattress support platform!



WARNING!
Certain bed positions are not suitable for specific diagnosis/medical conditions. Fowler position is not suitable for spinal cord injuries! Trendelenburg position is not suitable for patients with higher intracranial pressure!



WARNING!
Any serious incident that has occurred in relation to the device should be reported to the manufacturer and the competent authority of the Member State in which the user and/or patient is established!



WARNING!
This medical device is not intended for oxygen enriched environment!



WARNING!
This medical device is not intended for use with flammable substances!



WARNING!
This medical device is not portable medical electrical equipment!



WARNING!
Patient is allowed to use selected control elements only if hospital personnel had assessed that the patient´s physical and psychological state is in accordance with use of them and only if the hospital personnel had trained the patient in accordance with the instructions for use!

Additional instructions for correct use:

► Follow the instructions for use carefully.
► Use the bed exclusively if it is in perfect working order.
► If necessary, check the bed functions daily or at each shift change.
► Ensure any user has read and understood this manual completely before operating the product.
► Ensure that the bed is operated exclusively by qualified personnel who have been trained according to the instructions for use.
► Ensure that the patient (health permitting) has been informed about the operation of the bed and all applicable safety instructions.
► Move the bed exclusively on even, hard-surfaced floors.
► Replace any damaged parts immediately with original spare parts.
► Ensure that maintenance and installation are performed exclusively by qualified personnel who have been trained by the manufacturer.
► Before peak loads or unavoidable excess loads (CPR), place Mattress Support Platform in the lowest position.
► Ensure that only one adult patient uses the bed at any time.
► Take care to avoid injuries or squeezing when operating moving parts.
► When using lifting poles or infusion stands, ensure that nothing will be damaged when you move or adjust the bed.
► Brake the castors when the bed is occupied.
► Keep the Mattress Support Platform in the lowest position at any time when the healthcare personnel are not treating the patient in order to prevent the patient from falling or injuries.
► Ensure that Siderails are operated exclusively by healthcare personnel.
► Never use the bed in areas where there is a hazard of explosion.
► Ensure that parts of the bed intended for movement are not blocked.
► To prevent failures, use exclusively the manufacturer’s original accessories and mattresses.
► Ensure that the stipulated safe working load is not exceeded.
► If the patient‘s condition could lead to an entrapment, leave the mattress support platform in the flat position whilst unattended.
► Adjust bed height when transporting the bed in order to facilitate overcoming possible obstacles.
► Do not modify bed and its components without the manufacturer´s approval.
► Use the mattress system exclusively as specified in this manual and in perfect working order.
► Use the mattress system exclusively in its original state and do not modify it in any way.
► Have the mattress system used exclusively by or under supervision of trained and qualified nursing personnel.
► Have the mattress system serviced and installed exclusively by qualified personnel trained and authorised by the manufacturer.
► Do not exceed the maximum patient weight limit (see Mechanical Specifications).
► Do not use the bed in the case its parts have been removed unless these parts are designed to be removed.
► To avoid injury or crushing, take extra caution when operating any moving parts of the bed.
► When using infusion stands, ensure that nothing will be damaged when you move or adjust the bed.
► Hydraulic units and gas springs cointain an mineral oil. These mineral oils should not get into the sewerage because of toxicity for water organisms.

3 Intended use (Sprint 100)

The intended use is the short term hospitalization of the patient in the emergency departments and one day care departments, or other applicable departments, which includes above all the following aspects:

► Patient transport in the stretcher in the indoor environment. For the outdoor environment specific precautions in the instructions for use are valid.

► Adjustment of the positions needed for the, examinations, treatments, physiotherapy, sleeping, relaxation, preventive and mobilization reasons, routine nursing. These positions are further specified and described in the clinical evaluation of this device, together with their potential clinical outcomes and benefits.

► Providing the safe environment for the patient during all relevant procedures. The particular requirements on patient safety are the subject of the clinical evaluation, including evaluation of the risk/benefit ratio. The relevant safety issues are the part of the risk management file.

► Providing the suitable working conditions for the caregivers to perform the routine and specific tasks during the patient hospitalization.

3.1 User population

► Adult patients (weight >= 40 kg, height >= 146 cm, BMI >= 17) in the emergency and one day care units (Application Environment 1, 2 and 5 as in IEC 60601-2-52)

► Caregivers (nurses, doctors, technical personnel, transport personnel, cleaning personnel)

3.2 Contraindications

► The medical device is not intended for the pediatric patients use.

► The medical device is not intended for the use with patients exceeding the Maximum Patient Weight and whose body constitution is disproportionate to the size of Mattress Support Platform.

► The medical device is not intended for the long-term hospitalization with respect to dimensional parameters of the device and the used mattress.

► Certain positions are not suitable for specific diagnoses/medical conditions (e.g. spinal cord injuries vs. Fowler position, higher ICP patients vs. Trendelenburg). Staff expert assessment / nursing consideration is needed in all individual case of contraindication.

3.3 Operator

► Caregiver

► Patient (based on individual patient status assessment by caregiver the patient can utilize dedicated device functions)

4 Intended use (Sprint 100 mattresses)

The intended use is provide basic support surface for patient being treated on LINET's sprint range of Stretchers only. They are designed to provide comfort and reduce likelihood of pressure ulcers during short term use. The use of these mattresses does not remove the need for regular repositioning in line with best clinical practice (ref: NPUAP, EPUAP).

4.1 User population

► Adult patients (weight >= 40 kg, height >= 146 cm, BMI >= 17) in the emergency and one day care units (Application Environment 1, 2 and 5, as in IEC 60601-2-52)

► Caregivers (nurses, doctors, technical personnel, transport personnel, cleaning personnel)

4.2 Contraindications

► patient with higher risk of pressure ulcers than the mattress is designed for

► patients with higher weight than mattress weight limit

► patient's showing signs of pressure related tissue damage should be stepped on onto an alternative support surface based on risk assessment, clinical reasoning and best clinical practice (EPUAP, NPUAP guidelines)

4.3 Operator

► Caregiver

5 Product Description

SPRINT 100 WITH 4-PART MATTRESS SUPPORT PLATFORM

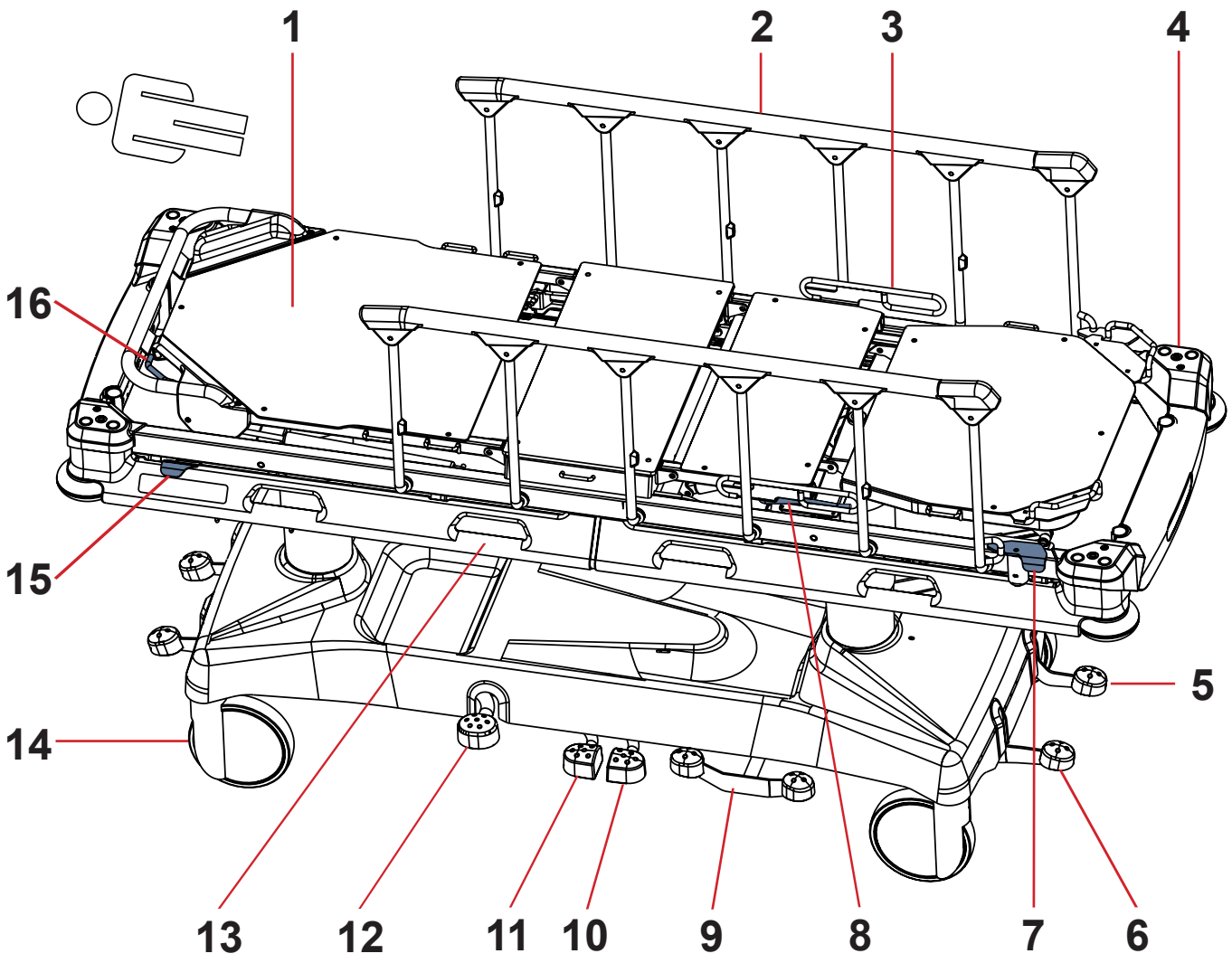

*Fig. Bed Overview (Sprint 100 with **4-part Mattress Support Platform**)*

1. **Mattress Support Platform**
2. **Collapsible Siderail**
3. **Thighrest Handle**
4. **Bushings for Accessories**
5. **Corner Bumper**
6. **Brake Pedal**
7. **Siderail Release Mechanism**
8. **Thighrest Control**
9. **Drive Pedal and Brake Pedal (optional)**
10. **Foot End Lowering Pedal**
11. **Head End Lowering Pedal**
12. **Lifting Pedal**
13. **Space for Accessories or for means of fixing patient**
14. **Castor**
15. **Siderail Release Mechanism (optional)**
16. **Backrest Release Handle**

SPRINT 100 WITH 2-PART MATTRESS SUPPORT PLATFORM

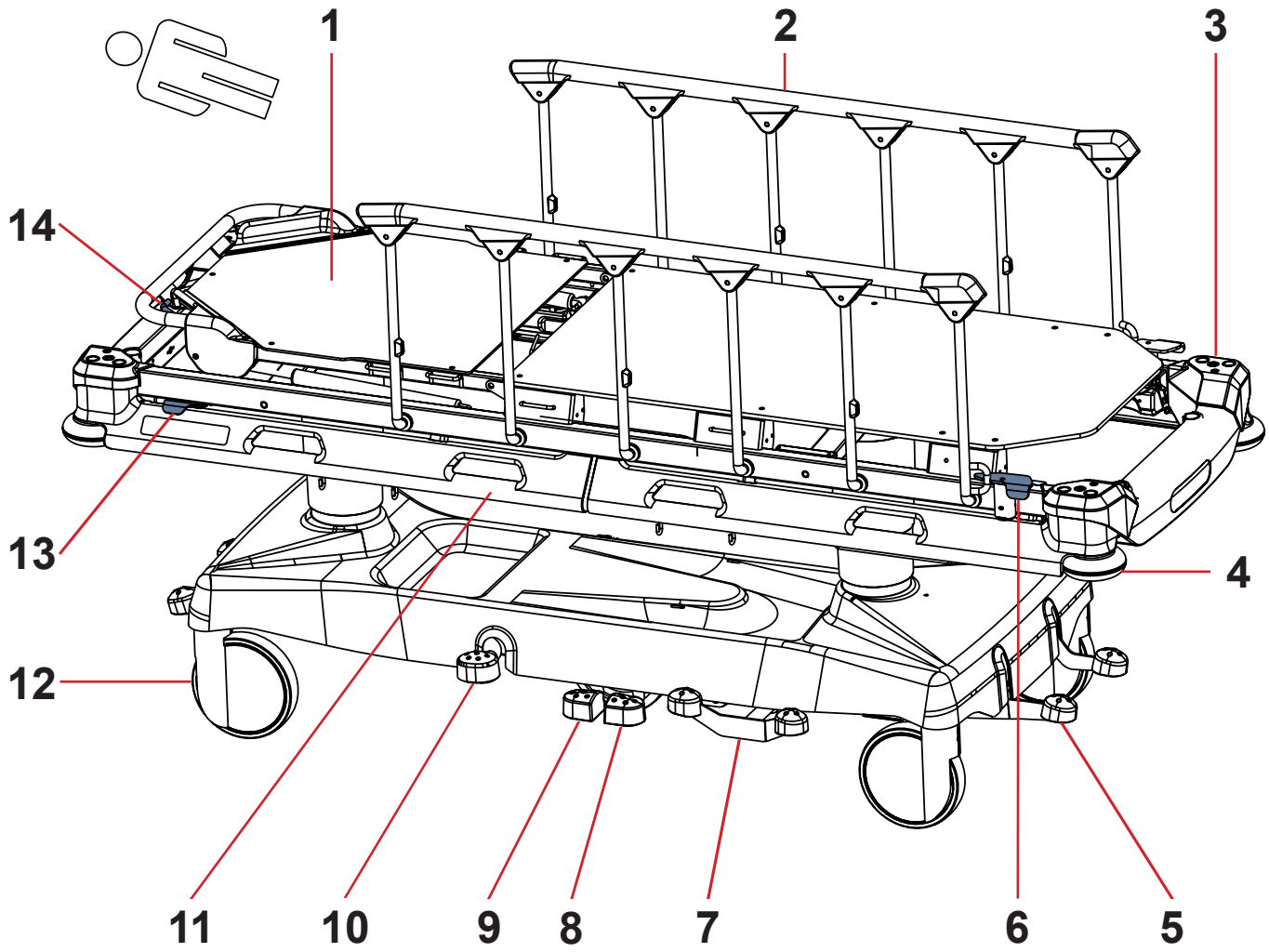

*Fig. Bed Overview (Sprint 100 with **2-part Mattress Support Platform**)*

1. **Mattress Support Platform**
2. **Collapsible Siderail**
3. **Bushings for Accessories**
4. **Corner Bumper**
5. **Brake Pedal**
6. **Siderail Release Mechanism**
7. **Drive Pedal and Brake Pedal (optional)**
8. **Foot End Lowering Pedal**
9. **Head End Lowering Pedal**
10. **Lifting Pedal**
11. **Space for Accessories or for means of fixing patient**
12. **Castor**
13. **Siderail Release Mechanism (optional)**
14. **Backrest Release Handle**

6 Technical Specification

All technical data are rated data and are subject to construction and manufacturing tolerances.

6.1 Identification of Applied Parts (Type B)

All part of the bed (and accessories) the patient can reach are type B Applied Parts.

- Mattress Support Platform Frame, Parts of Mattress Support Platform
- Siderails
- Bed Ends
- Mattress

6.2 Mechanical Specifications

6.2.1 Sprint 100 with Standard Mattress Support Platform

SPRINT 100 WITH 4-PART MATTRESS SUPPORT PLATFORM

Parameter	Value
External Dimensions in Standard Bed Position (length x width)	211 cm x 76 cm
Siderail Height above Mattress Support Platform	4 cm (minimum), 36,5 cm (maximum)
Siderail Length	125 cm
Distance between siderail bars	21 cm
Mattress dimensions (length x width)	193 cm x 66 cm
Maximum Mattress Height	13 cm
Castor diameter	20 cm
Minimum-Maximum Mattress Support Platform Height above floor (without Mattress)	55,5 cm - 88 cm
Maximum Backrest Angle	90°
Maximum Thighrest Angle	40°
Maximum Calfrest Angle	21°
Trendelenburg/Anti-Trendelenburg Position (Angle)	+18°/-18°
Bed Weight	120 Kg (depending on configuration)
SWL (Bed Safe Working Load)	320 Kg
Maximum Patient Weight	280 Kg

SPRINT 100 WITH 2-PART MATTRESS SUPPORT PLATFORM

Parameter	Value
External Dimensions in Standard Bed Position (length x width)	211 cm x 76 cm
Siderail Height above Mattress Support Platform	3 cm (minimum), 35,5 cm (maximum)
Siderail Length	125 cm
Distance between siderail bars	21 cm
Mattress dimensions (length x width)	193 cm x 66 cm
Maximum Mattress Height	13 cm
Castor diameter	20 cm
Minimum-Maximum Mattress Support Platform Height above floor (without Mattress)	56,5 cm - 89 cm
Maximum Backrest Angle	90°
Trendelenburg/Anti-Trendelenburg Position (Angle)	+18°/-18°
Bed Weight	120 Kg (depending on configuration)
SWL (Bed Safe Working Load)	320 Kg
Maximum Patient Weight	280 Kg

6.2.2 Sprint 100 with Wide Mattress Support Platform

SPRINT 100 WITH 4-PART MATTRESS SUPPORT PLATFORM

Parameter	Value
External Dimensions in Standard Bed Position (length x width)	211 cm x 86 cm
Siderail Height above Mattress Support Platform	4 cm (minimum), 36,5 cm (maximum)
Siderail Length	125 cm
Distance between siderail bars	21 cm
Mattress dimensions (length x width)	193 cm x 76 cm
Maximum Mattress Height	13 cm
Castor diameter	20 cm
Minimum-Maximum Mattress Support Platform Height above floor (without Mattress)	55,5 cm - 88 cm
Maximum Backrest Angle	90°
Maximum Thighrest Angle	40°
Maximum Calfrest Angle	20,5°
Trendelenburg/Anti-Trendelenburg Position (Angle)	+18°/-18°
Bed Weight	120 Kg (depending on configuration)
SWL (Bed Safe Working Load)	320 Kg
Maximum Patient Weight	280 Kg

SPRINT 100 WITH 2-PART MATTRESS SUPPORT PLATFORM

Parameter	Value
External Dimensions in Standard Bed Position (length x width)	211 cm x 86 cm
Siderail Height above Mattress Support Platform	3 cm (minimum), 35,5 cm (maximum)
Siderail Length	125 cm
Distance between siderail bars	21 cm
Mattress dimensions (length x width)	193 cm x 76 cm
Maximum Mattress Height	13 cm
Castor diameter	20 cm
Minimum-Maximum Mattress Support Platform Height above floor (without Mattress)	56,5 cm - 89 cm
Maximum Backrest Angle	90°
Trendelenburg/Anti-Trendelenburg Position (Angle)	+18°/-18°
Bed Weight	120 Kg (depending on configuration)
SWL (Bed Safe Working Load)	320 Kg
Maximum Patient Weight	280 Kg

6.3 Environment Conditions (Sprint 100)

Parameter	Value
Use Conditions	
Ambient Temperature	10°C-40°C
Relative Humidity	30% - 75 %
Atmospheric Pressure	795 - 1060 hPa
Storage and Transport Conditions	
Ambient Temperature	-20°C- 50°C
Relative Humidity	20% - 90 %
Atmospheric Pressure	795 - 1060 hPa

7 Use and Storage Conditions

Respect values of the parameters connected with environment conditions in the chapter Technical Specification during use and storage of the product.
Sprint 100 is not suitable for indoor environments containing flammable gases (except oxygen cylinders).

8 Scope of Delivery and Bed Variants

8.1 Delivery

► Upon receipt, check that the shipment is complete as specified on the delivery note.
► Notify the carrier and supplier of any deficiencies or damages immediately as well as in writing or make a note on the delivery note.

8.2 Scope of Delivery

- ■ Sprint 100 Universal Transport Stretcher
- ■ Instructions for use

8.3 Sprint 100 Variants

Basic Configuration:

- ■ 2-part Mattress Support Platform
- ■ 4x Tente 200 mm castors
  - □ directional castor on head end
  - □ directional castor on foot end
- ■ Brakes from Head End and from Foot End
- ■ Undercarriage Cover
- ■ Siderails
- ■ Foot Siderail Release Mechanism

Optional bed features:

- ■ Mattress Support Platform
  - □ 4-part Mattress Support Platform
  - □ Wide Mattress Support Platform
  - □ Fifth Castor (FlexiDrive)
  - □ Head and Foot Siderail Release Mechanism
  - □ X-Ray Cassette Holder (2-part Mattress Support Platform)
  - □ X-Ray Cassette Holder (4-part Mattress Support Platform)
  - □ C-arm ready bed
- ■ Siderails
  - □ Siderail shock absorber (SoftDrop)
- ■ Infusion stand and handles
  - □ 1x pair of Foldable handles (Head End)
  - □ 1x pair of Foldable handles (Foot End)
  - □ 1x pair of Foldable Infusion Stands (IV&Drive) and handles (Head End or Foot End)
  - □ 1x pair of Removable handles
  - □ 1x pair of Fixed handles
- ■ Undercarriage
  - □ Brakes on side
- ■ Accessory Holders
  - □ on side
  - □ on Head End
  - □ on Foot End
- ■ Angle Indicators
  - □ Backrest and Seat section of Mattress Support Platform (on side)
  - □ Mattress Support Platform frame (on side in seat section)
- ■ Potential Interconnection
  - □ with Potential Interconnection
  - □ without Potential Interconnection

9 Putting into Service

WARNING!
Risk of injury when working on the bed!
► Ensure that the castors are locked prior to putting into service and maintenance.

CAUTION!
Material damage due to incorrect putting into service!
► Ensure that putting into service is performed exclusively by manufacturer´s customer service or trained hospital personnel.

CAUTION!
Material damage due to incorrect use!
► Do not use pedals for lifting or lowering if the bed undercarriage is not in horizontal position!

NOTE For safe, easy handling, LINET ® recommends having two technicians assemble the bed.

Set up the bed as follows:

► Unpack the bed.
► Check the delivery (see Scope of Delivery and Bed Variants).
► Ensure that all of the required mechanisms are available on site.
► Raise siderails up.
► Install accessories.
► Set up the bed exclusively on a suitable floor surface (see Transport).

HOOKS ON THE ACCESSORY RAIL (optional)

If the bed is equipped with accessory rail on the head end / foot end hooks on the accessory rail are delivered in the safety position. In order to use the hooks remove them and place them on the accessory rail from the outer side (reversely).

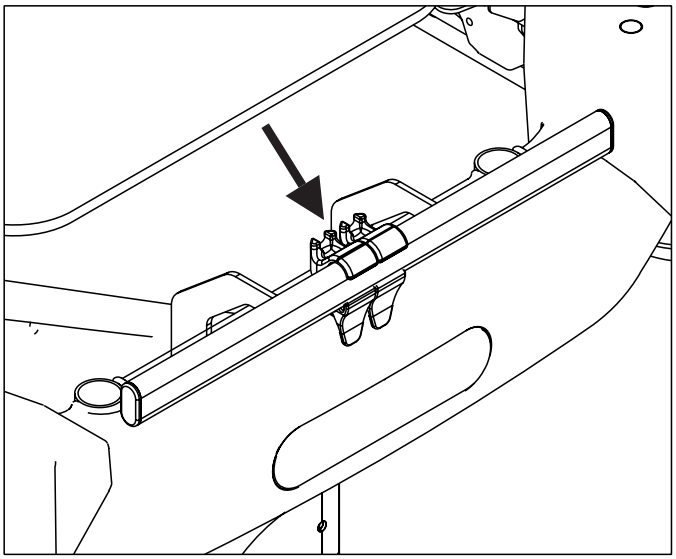

Fig. Hooks in original position

9.1 Mattress Support Platform

Sprint 100 has Mattress Support Platform with two sections or four sections.

2-PART MATTRESS SUPPORT PLATFORM

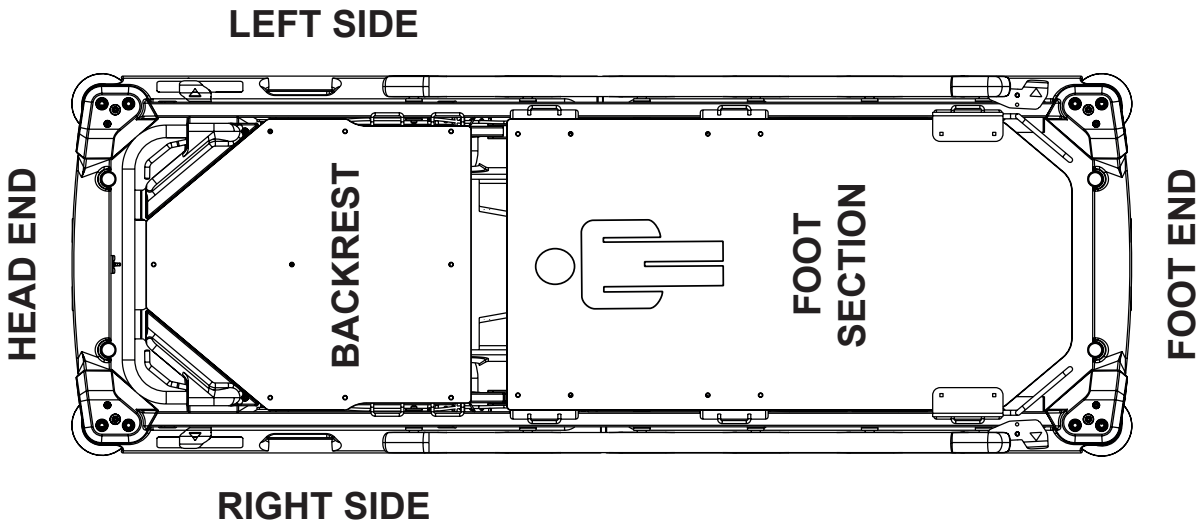

Fig. 2-part Mattress Support Platform

4-PART MATTRESS SUPPORT PLATFORM

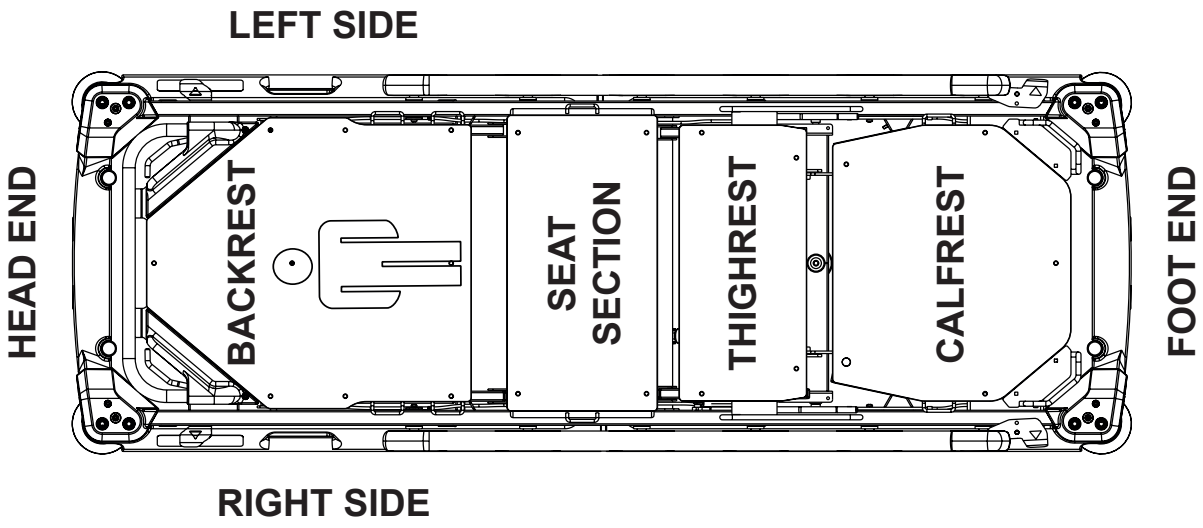

Fig. 4-part Mattress Support Platform

9.2 Potential Interconnection (optional)

The bed is equipped with a standard protective connector. This connector is used for potential equalisation between the bed and any intravascular or intracardiac device connected to the patient to protect the patient from static electric shocks.

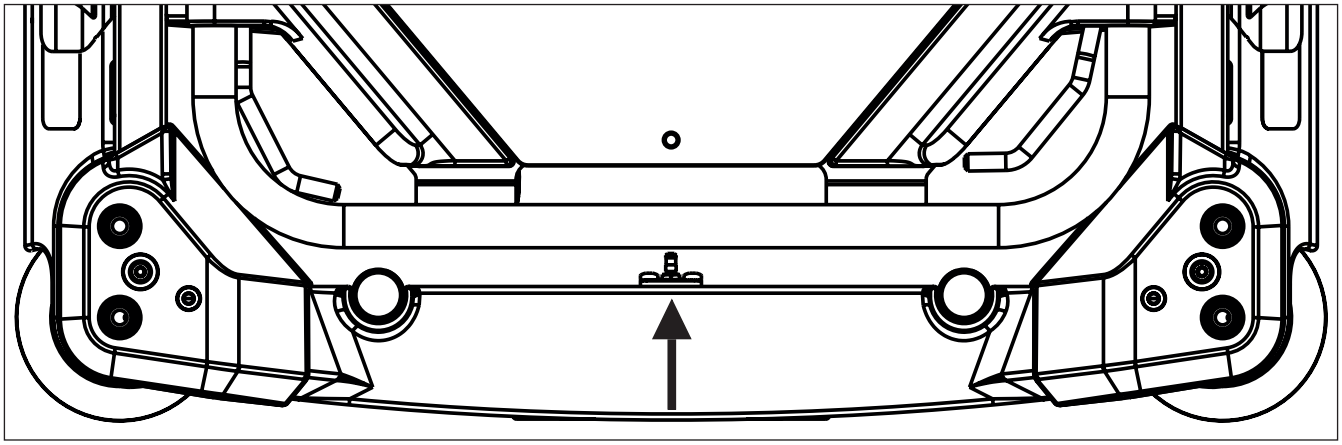

Fig. Potential equalisation - male (head end)

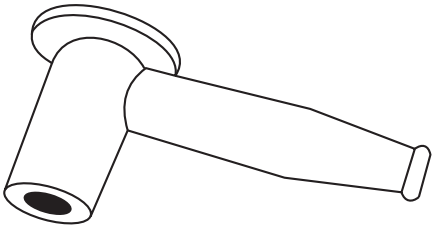

Fig. Potential equalisation connector - female

Use equalisation connector if:

- the patient is connected to any intravascular or intracardiac device.

Before connecting the patient to an intravascular/intracardiac device:

► Connect the ground wire of the device to the potential equalisation connector on the bed on which the patient in question is lying.
► Use a standard hospital connector.
► Make sure that the connectors match.
► Make sure that there is no possibility for inadvertent disconnection.

Before moving the bed:

► Disconnect the patient from the intravascular or intracardiac device.
► Disconnect the potential equalisation connector.

9.3 Before Use

Prepare the bed for use as follows:

► Perform bleeding procedure of hydraulic units in the highest bed position by pressing lifting pedal 10 times.
► Raise the Mattress Support Platform to the highest position.
► Lower the Mattress Support Platform to the lowest position.
► Tilt the Mattress Support Platform to Trendelenburg position.
► Position the Mattress Support Platform to Anti-Trendelenburg tilt.
► Check that the castors as well as main brake work correctly.
► Check that the Siderails function properly.
► Dispose of all packaging (see „17 Disposal“ on the page 73).

9.4 Transport

For a safe transport, observe the following:

► Ensure that no cables are run over when moving a bed.
► Ensure that the castors are not braked before moving the bed.
► Adjust bed height to at least 20 cm below maximum height.
► Push bed by handles on Head End or Foot End.
► Move the bed exclusively on suitable floor surfaces.
► Ensure the bed is braked when it should not move (see „10.2 Castor Control“ on the page 27).
► For longer distances, ensure that the castor steering function (main control) is activated.
► Ensure that the brakes are released before moving the bed.

Suitable surfaces:

- Tile
- Hard linoleum
- Poured flooring

Unsuitable surfaces:

- Too soft, unsealed or defective flooring
- Soft wooden flooring
- Soft and porous stone floors
- Carpeted floors with underlay
- Soft linoleum

Outdoor transport (especially from heliport) is allowed under these conditions:
Surface of an outdoor environment is not too soft and too segmented and too coarse but hard and flat as required for indoor use.

10 Manipulation

WARNING!
Risk of injury when adjusting the bed!
- ► Ensure that there are no body parts between the Mattress Support Platform elements and the Mattress Support Platform frame when adjusting the bed.
- ► Ensure that there are no body parts below the Mattress Support Platform frame before adjusting the bed.

WARNING!
Risk of injury when sitting on the Foot End!
- ► Extra care must be taken when sitting on the Foot End of the bed!

WARNING!
Risk of injury when getting in and getting out of the bed!
- ► Patient is allowed to get into the bed or get out of the bed just from the right side or left side of the bed!

Control Signs	Meaning
	Backrest Control
	Thighrest Control
	Fold siderail down
	Lift Mattress Support Platform up
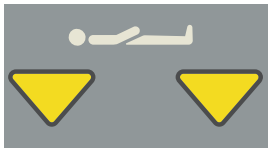	Lower Mattress Support Platform down
	Trendelenburg Tilt
	Anti-Trendelenburg Tilt

10.1 Collapsible Siderails

The collapsible siderails are components of the bed in contact with patient.
The nursing personnel are responsible for the siderails being raised up while the patient is in bed.

WARNING!
Risk of injury due to incorrectly latched siderail!
► Ensure that siderail is secured in the upper position or folded down to the lowest position.

WARNING!
Risk of injury due to incorrect position of siderails!
► Ensure that siderails are folded up while the patient is in bed.

WARNING!
Risk of injury due to incorrect manipulation with siderails!
► Ensure that there is no body part between siderail bars during folding siderail down.

SIDERAIL DESCRIPTION

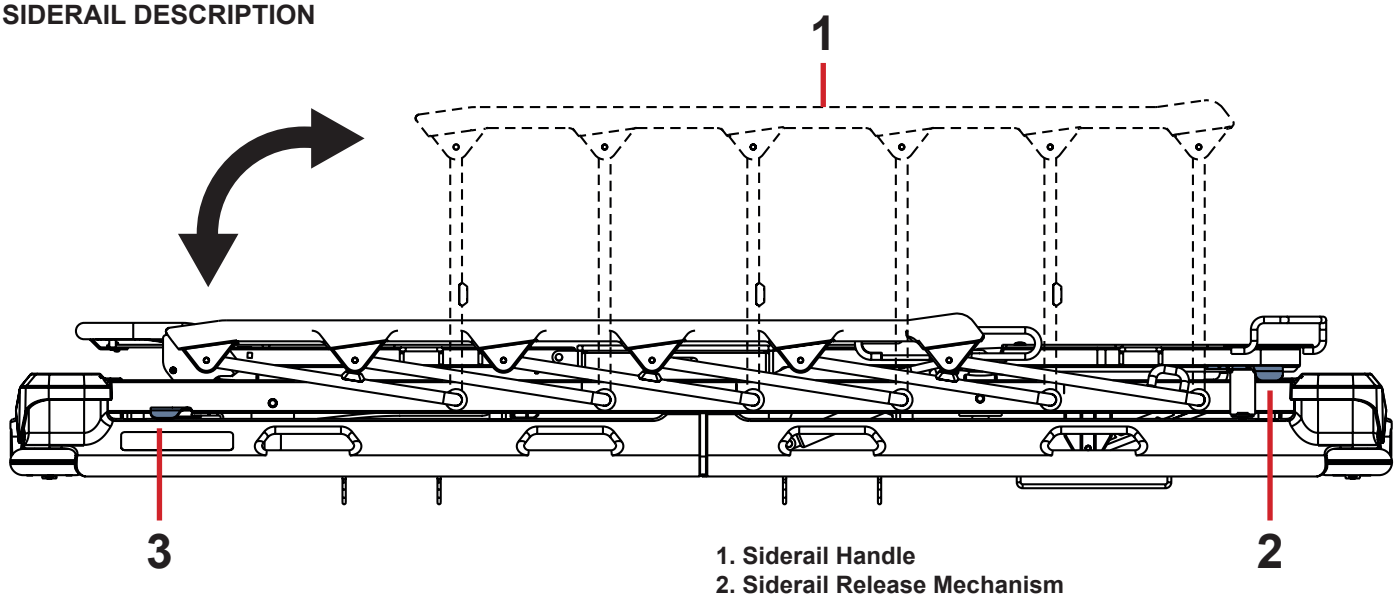

1. Siderail Handle
2. Siderail Release Mechanism
3. Siderail Release Mechanism (optional)

Fig. Manipulation with Collapsible Siderail

MANIPULATION

To raise siderail up:

► Grab siderail by Siderail Handle (**1**).
► Pull siderail up until it latches.

To release siderail down:

► Unlock siderail by pulling Siderail Release Mechanism (**2** or **3**) at Foot End or at Head End.
► Fold down siderail slowly.

NOTE Siderail Release Mechanisms are connected. Pulling Siderail Release Mechanism at Foot End means pulling Siderail Release Mechanism at Head End and pulling Siderail Release Mechanism at Head End means pulling Siderail Release Mechanism at Foot End at the same time.

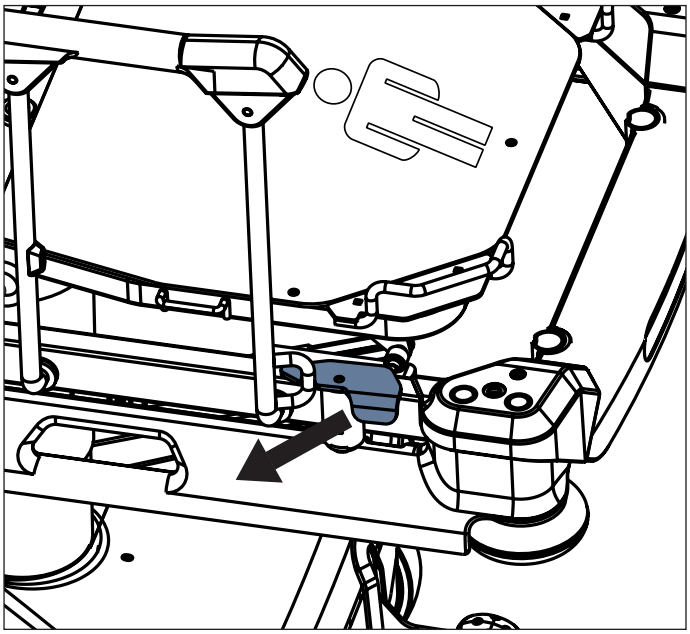

Fig. Manipulation with Siderail Release Mechanism at foot end

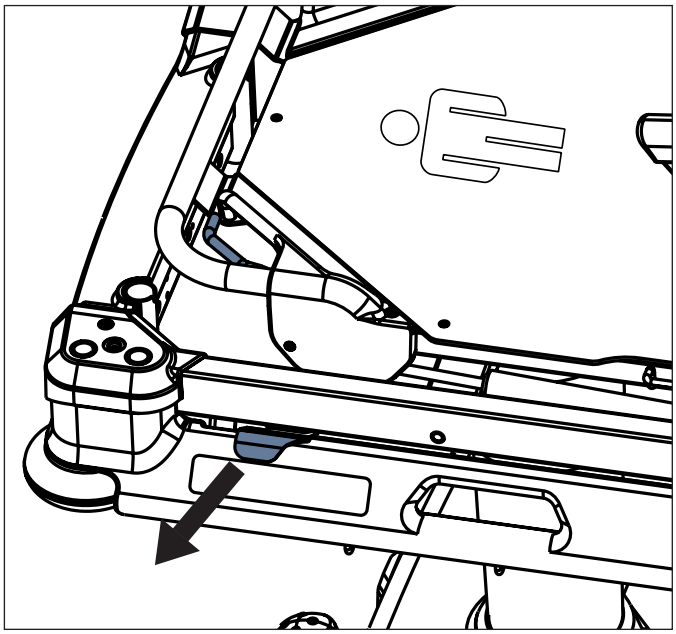

Fig. Manipulation with Siderail Release Mechanism at head end

10.2 Castor Control

CAUTION!
Material damage due to incorrect transport and involuntary movement!

- ► Ensure that the castors are braked prior to assembly, disassembly and maintenance.
- ► Ensure that the castors are braked when the bed is occupied.
- ► Ensure that the castors are braked when the bed should not move.

The bed is equipped with central castor control and brake system.
A directional castor can be situated at head end or foot end depending on bed configuration.
The castor control pedals are located at head end and foot end.
Optionally, castor control pedals are located on the bed sides also.

At head end and foot end there are green and red pedals.
Red colour refers to braking and green colour refers to steering.

Each pedal has 3 control positions.
Pedals are interconnected such that all pedal functions belong to each pedal. In following table the pedal functions are described.

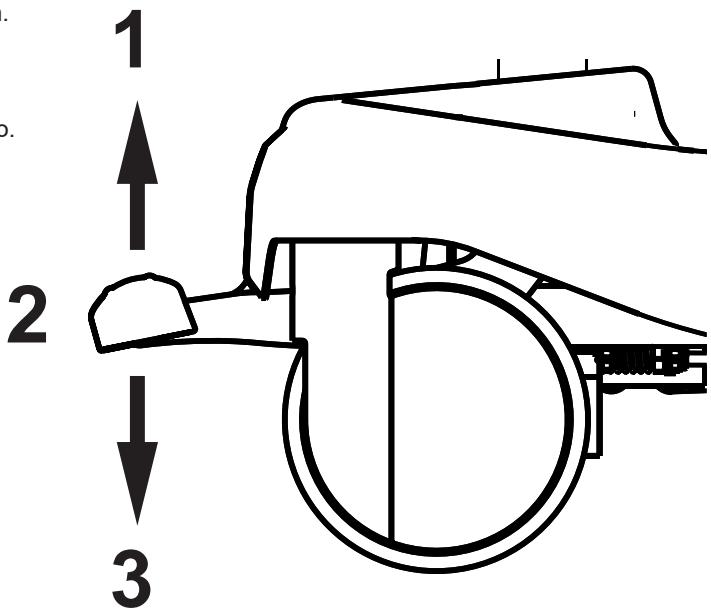

Fig. Three Pedal Positions

Pedal Colour	Upper Position (1)	Middle Position (2)	Lower Position (3)
GREEN	BRAKED	UNRESTRICTED MOVEMENT	STEERING / FIFTH CASTOR
RED	STEERING / FIFTH CASTOR	UNRESTRICTED MOVEMENT	BRAKED

10.2.1 Braked Bed

To brake the bed:

► Press red Brake pedal (**1 or 2**) to the lower position.
All four castors are braked.

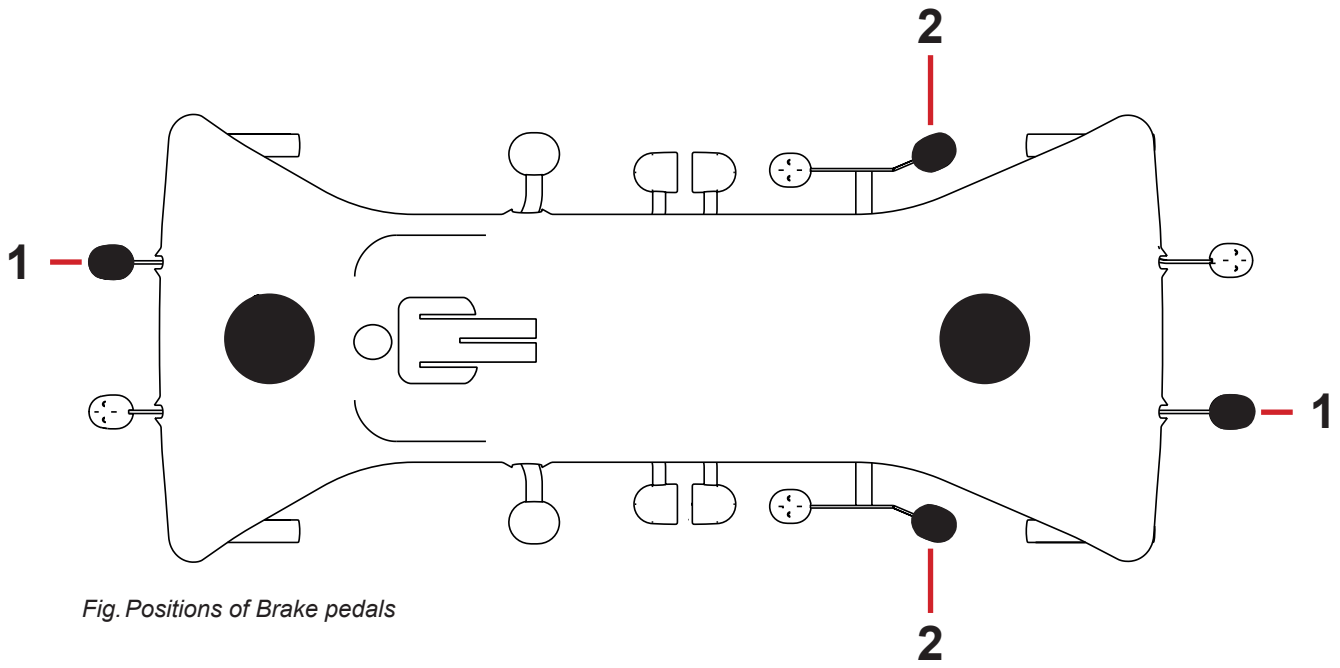

Fig. Positions of Brake pedals

1. Brake Pedal (standard) - RED
2. Brake Pedal (optional) - RED

10.2.2 Forward Movement (Steering)

To set forward movement:

► Press green Drive pedal (**3 or 4**) to the lower position.
The front **left castor** is locked after its forward movement was reached. The bed moves straight ahead.
If the bed is equipped with a **fifth castor**, this castor determines the direction of movement.

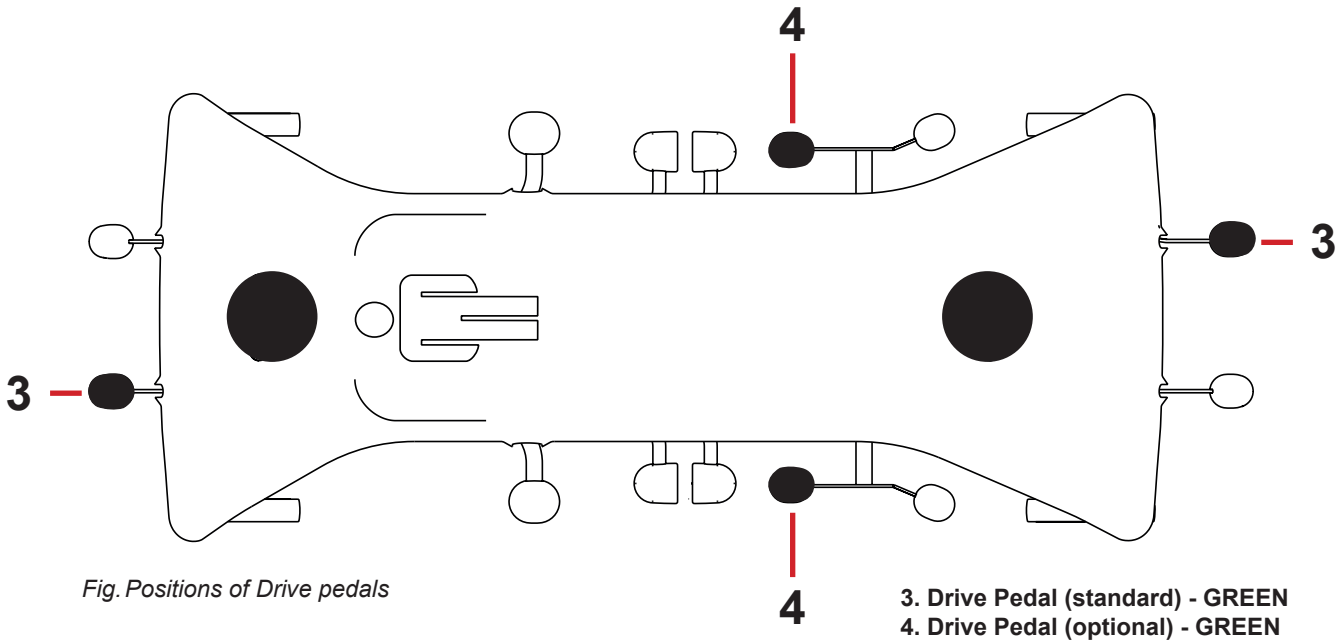

Fig. Positions of Drive pedals

3. Drive Pedal (standard) - GREEN
4. Drive Pedal (optional) - GREEN

10.2.3 Unrestricted Movement

To set unrestricted movement:

► Leave all Brake pedals and Drive pedals in their middle position.
All four castors are unlocked.
Unrestricted movement is enabled.

10.3 Bed Positioning

10.3.1 Backrest

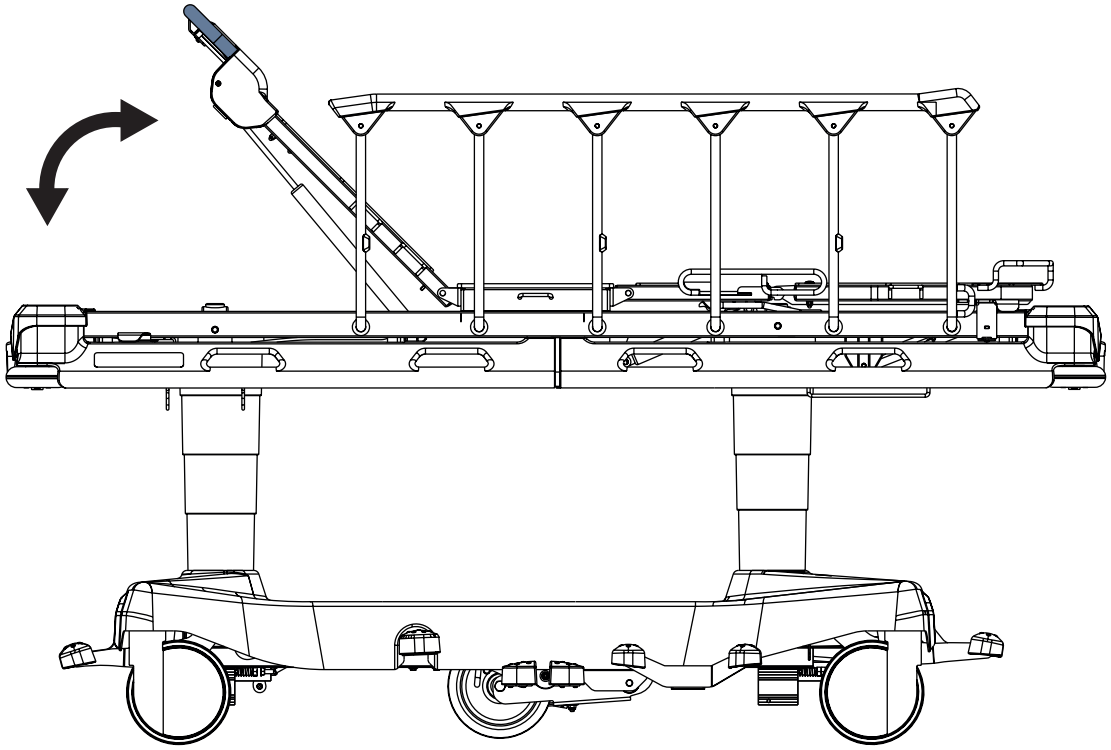

WARNING!
Risk of injury or material damage due to incorrect lifting of the Backrest without any patient on the mattress support platform!
► During lifting the Backrest up without any patient on the mattress support platform, hold the Backrest carefully so that a fast movement of the Backrest does not hit you!
► Before lifting the Backrest up without any patient on the mattress support platform, ensure that there are no objects or body parts between the lateral bars of raised siderails and the Backrest!

To position Backrest:

► press Backrest Release Handles towards the Backrest frame
► position Backrest

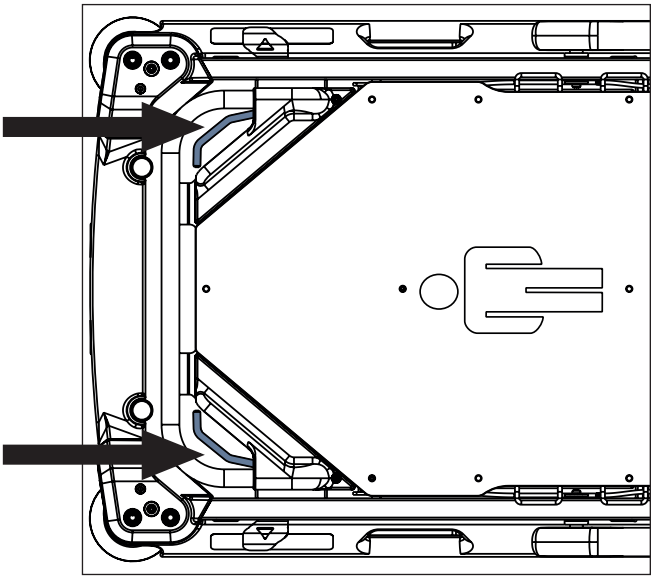

Fig. Positions of Backrest Release Handles

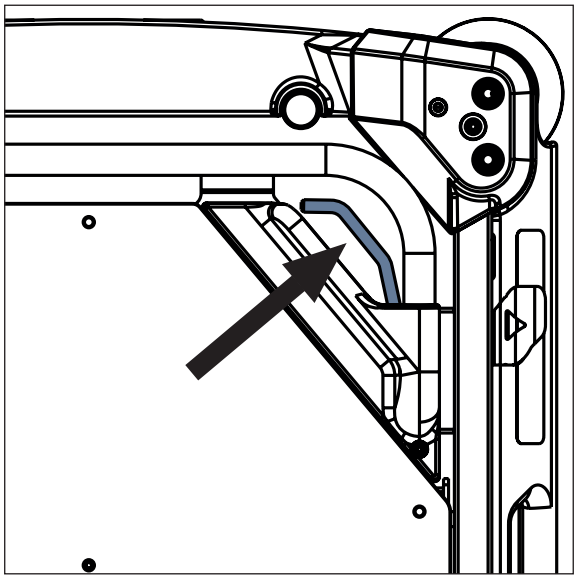

Fig. Manipulation with Backrest Release Handle

10.3.2 Thighrest (only 4-part Mattress Support Platform)

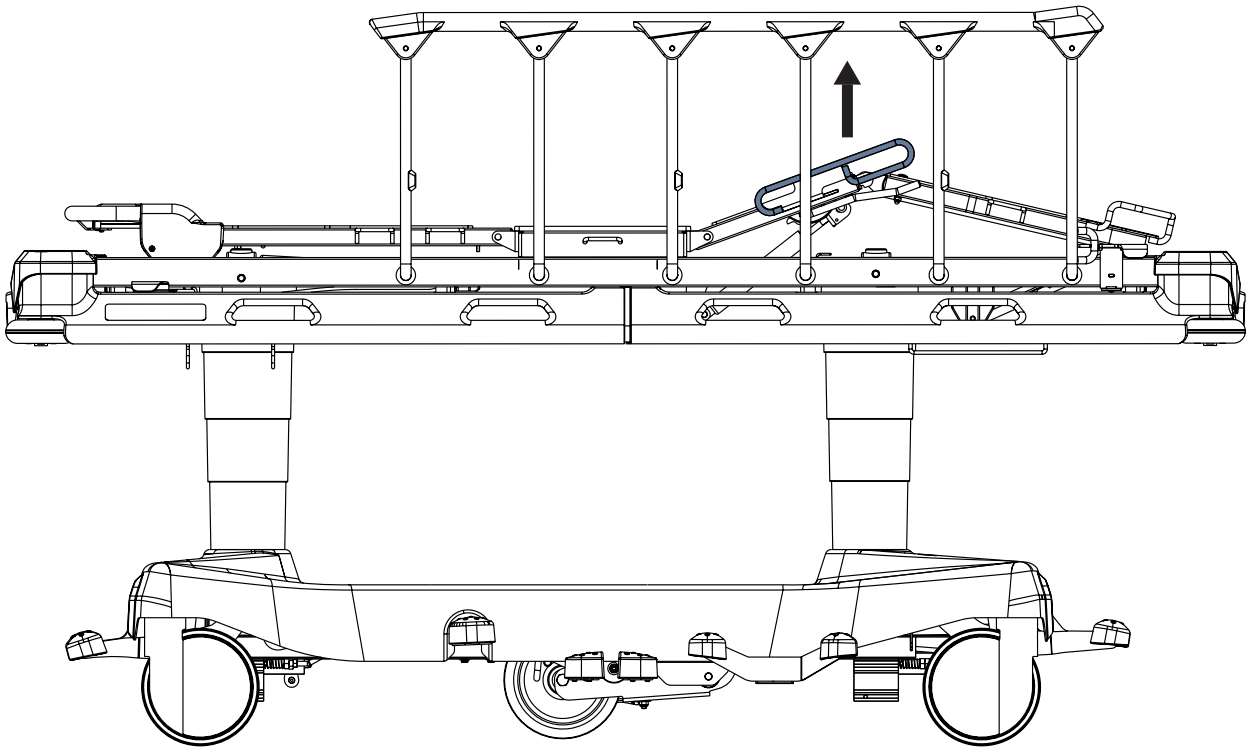

To lift Thighrest:

► press Thighrest control and repeat it until intended position is reached
If the Thighrest is loaded use Thighrest handle to lift the Thighrest.

To lower Thighrest:

► press and hold Thighrest control and push Thighrest down until intended position is reached

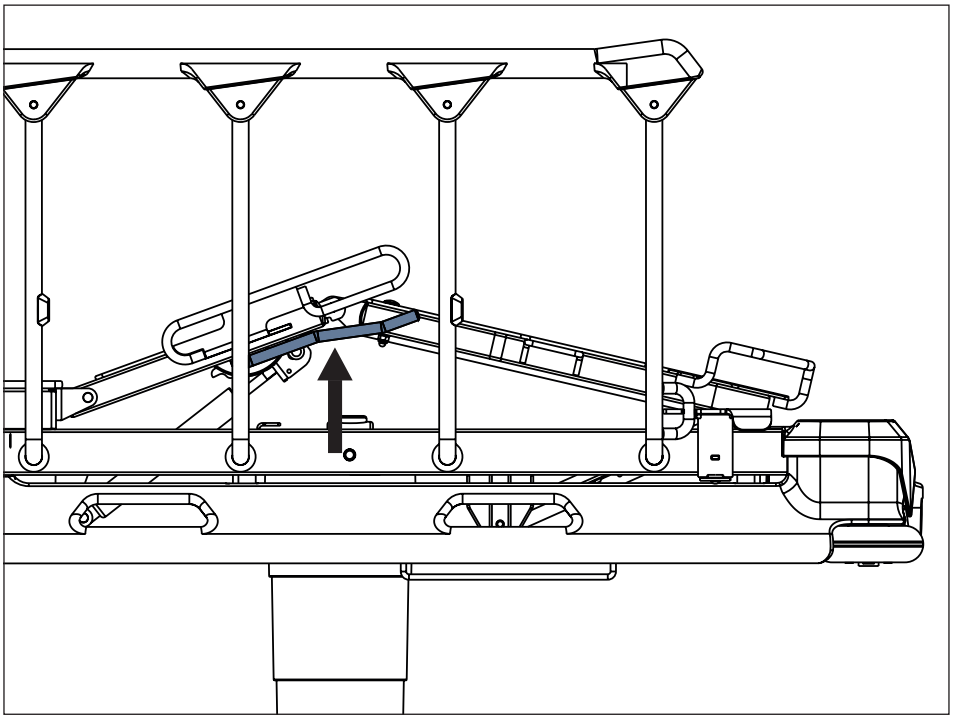

Fig. Positions of Thighrest Control

10.3.3 Calfrest (only 4-part Mattress Support Platform)

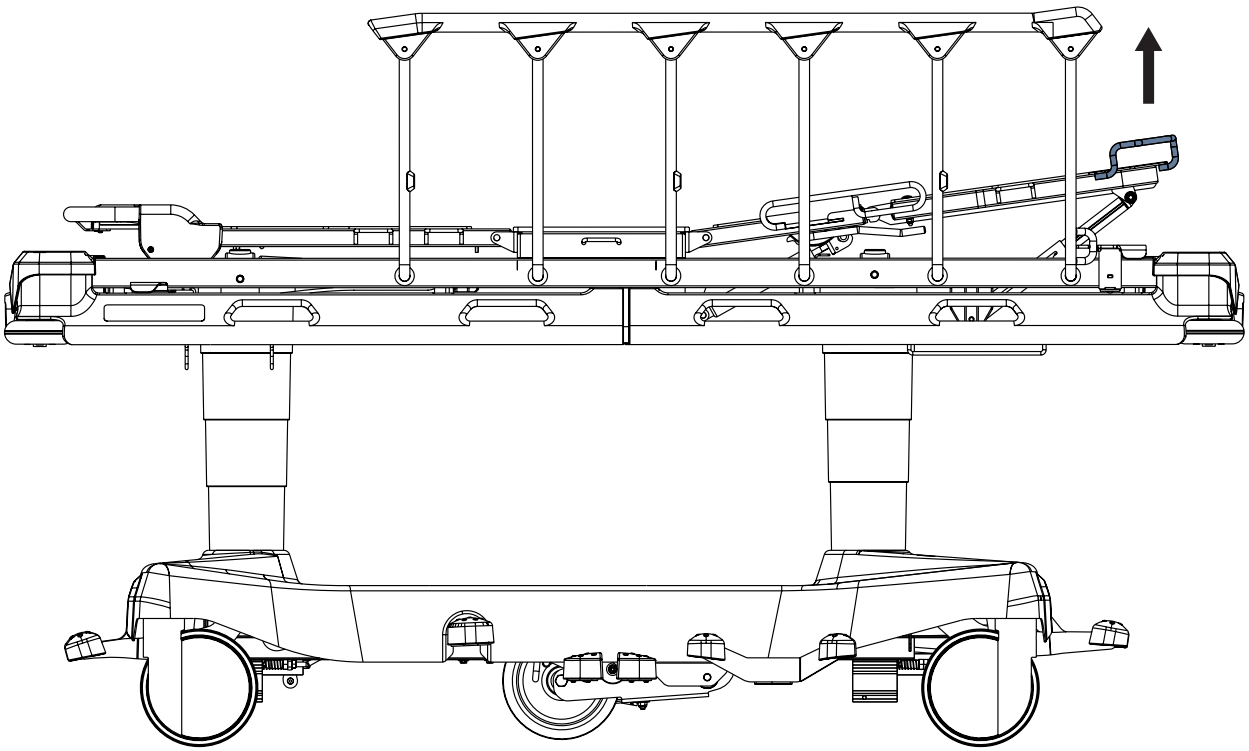

To position Calfrest, position Thighrest firstly.

To lift Calfrest:

► lift Calfrest by the handle to intended position
► lower the Calfrest so that catch fits in the ratchet-bar

To lower Calfrest:

► lift Calfrest slightly by the handle
► lower Calfrest to intended position
► ensure the catch fits in the ratchet-bar during slight lifting of the Calfrest

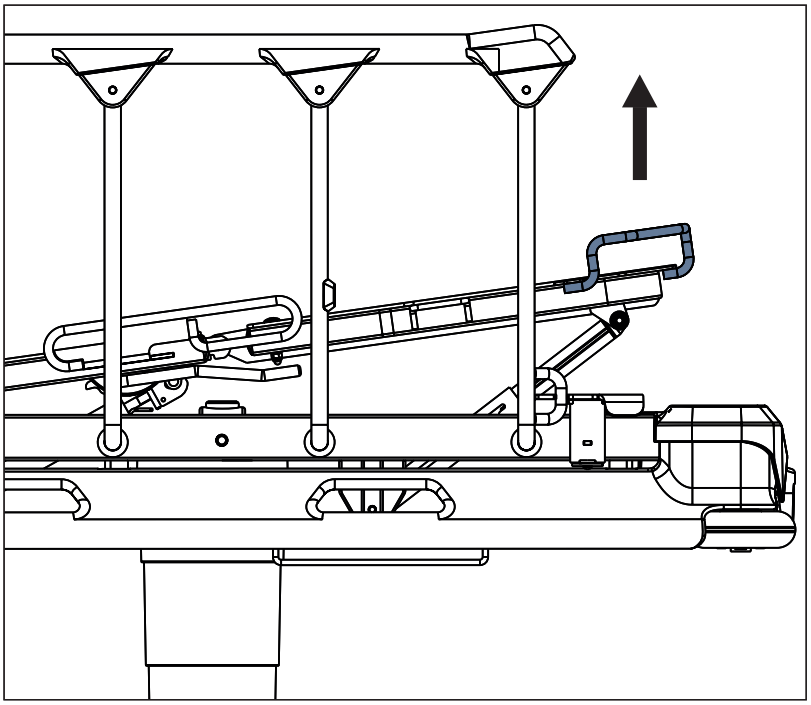

Fig. Calfrest Positioning

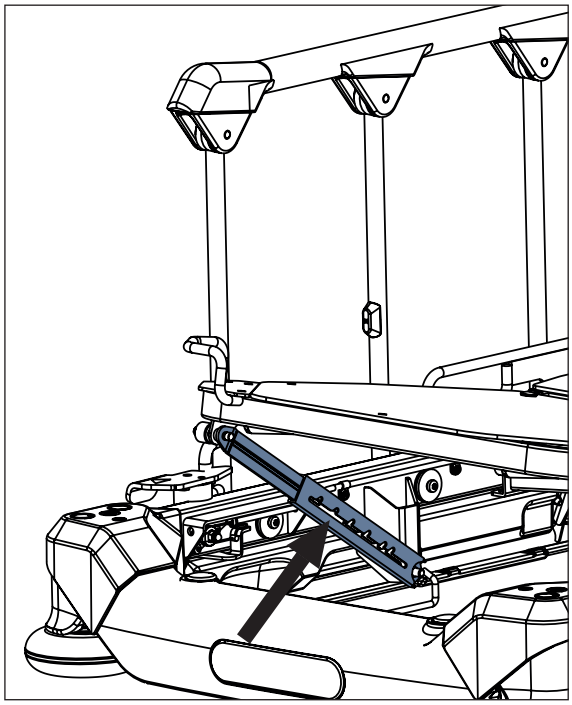

Fig. Catch in the ratchet-bar

10.3.4 Lifting

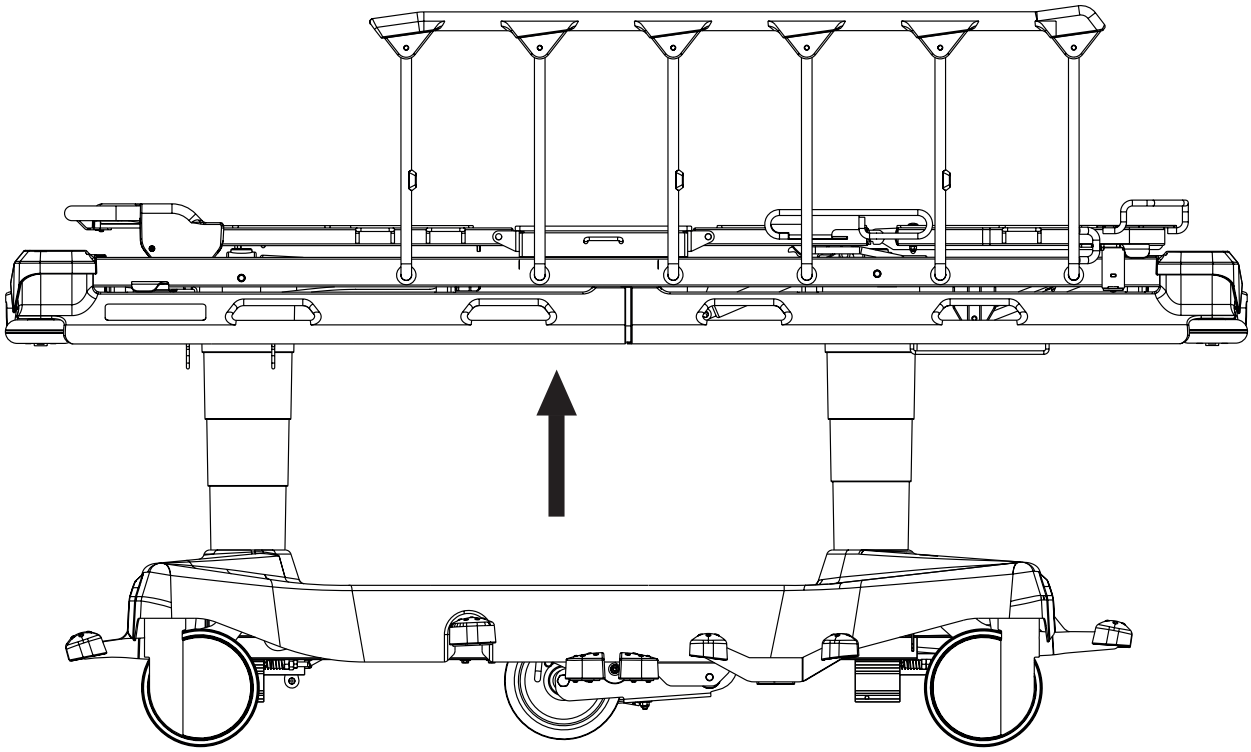

To lift Mattress Support Platform:

► press Lifting pedal and repeat it until intended position is reached

To perform bleeding procedure of hydraulic units:

► press Lifting pedal 10 times in the highest bed position

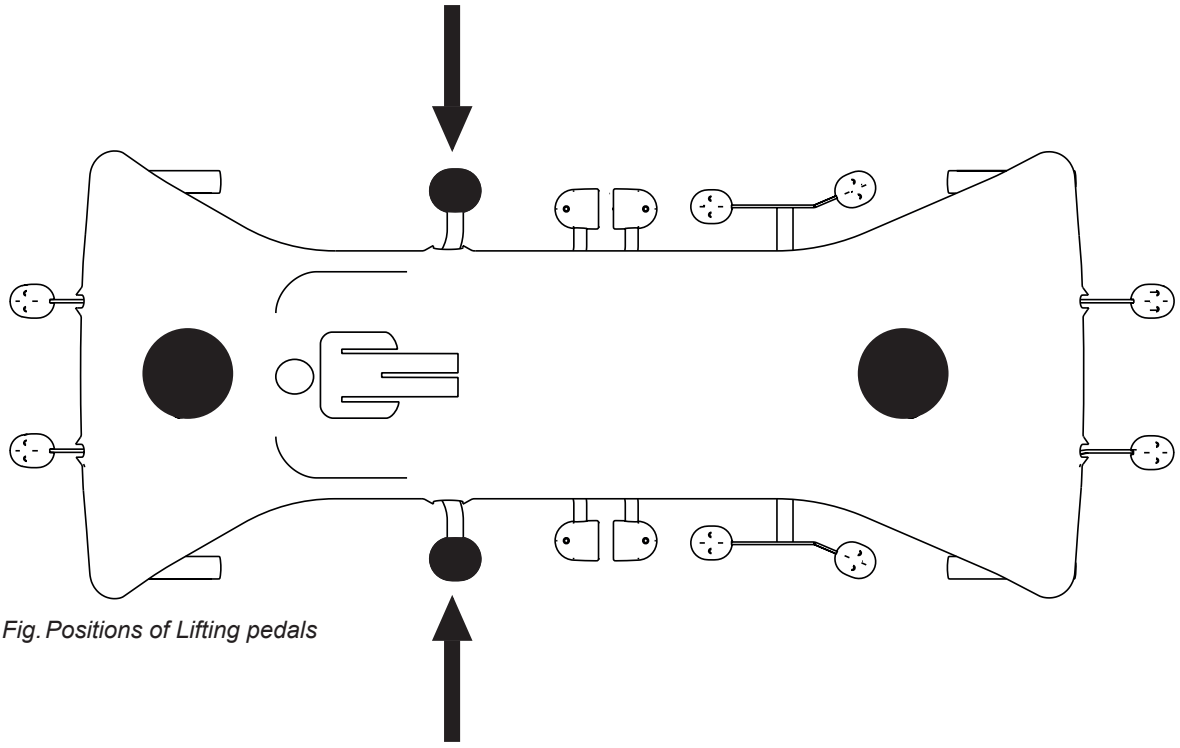

Fig. Positions of Lifting pedals

10.3.5 Lowering

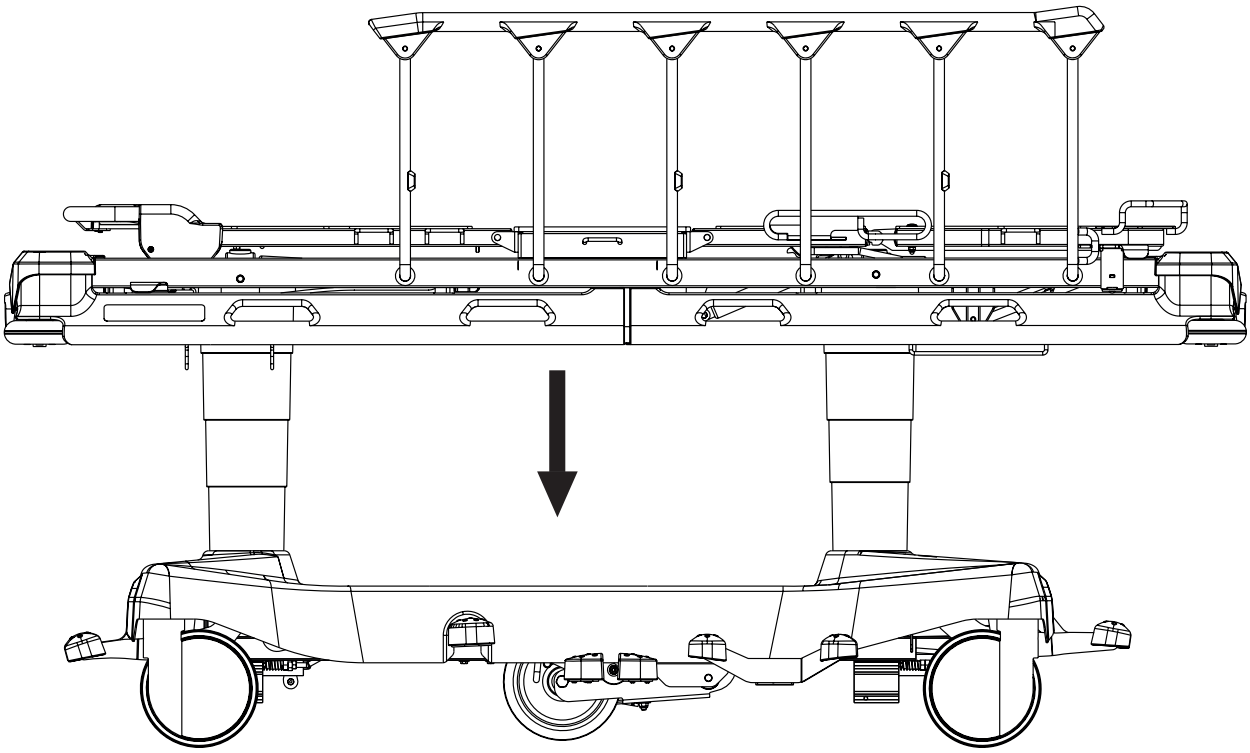

CAUTION!
Risk of material damage due to objects on the undercarriage cover!
► Do not place objects on the undercarriage cover outside storage space!
► Respect dimensions of objects placed in storage space of the undercarriage cover!
► For information about objects intended for storage in the space of undercarriage cover follow chapter Accessories.

To lower Mattress Support Platform:

► press and hold Head End Lowering pedal and Foot End Lowering pedal at the same time until intended position is reached
If the horizontal position is required ensure this position was reached.
In order to eliminate a remaining longitudinal tilt use corresponding pedal.

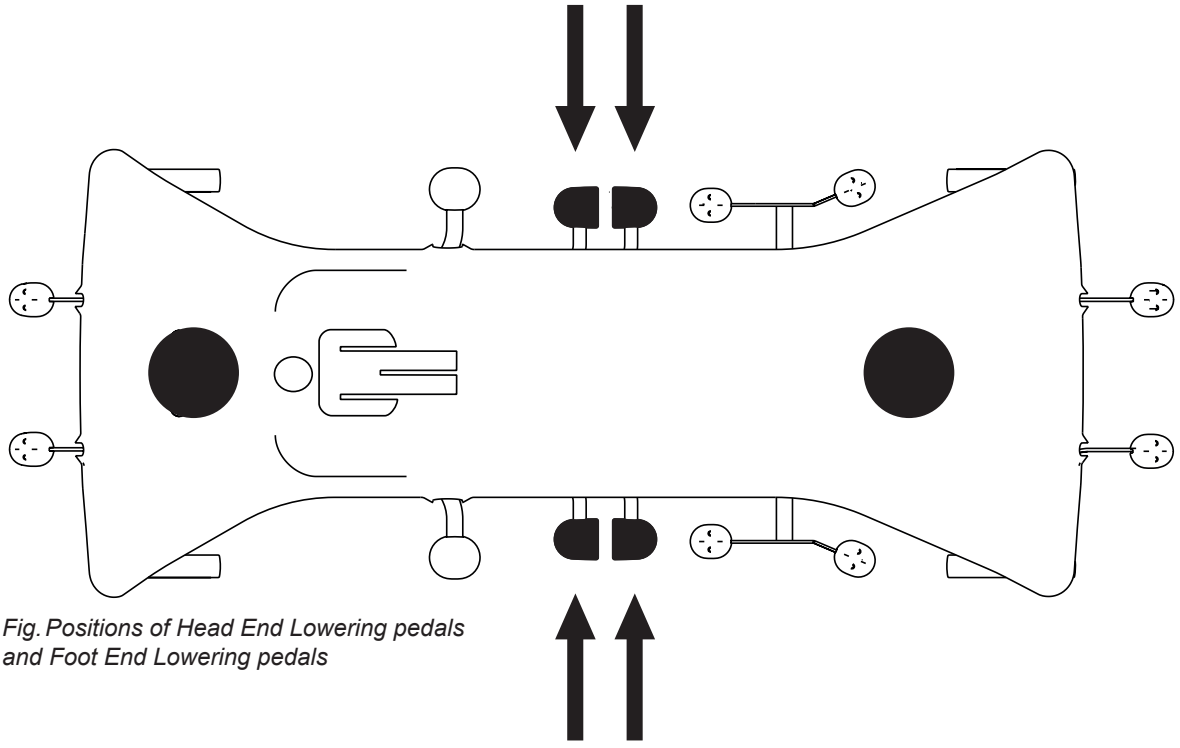

Fig. Positions of Head End Lowering pedals and Foot End Lowering pedals

10.3.6 Trendelenburg Position

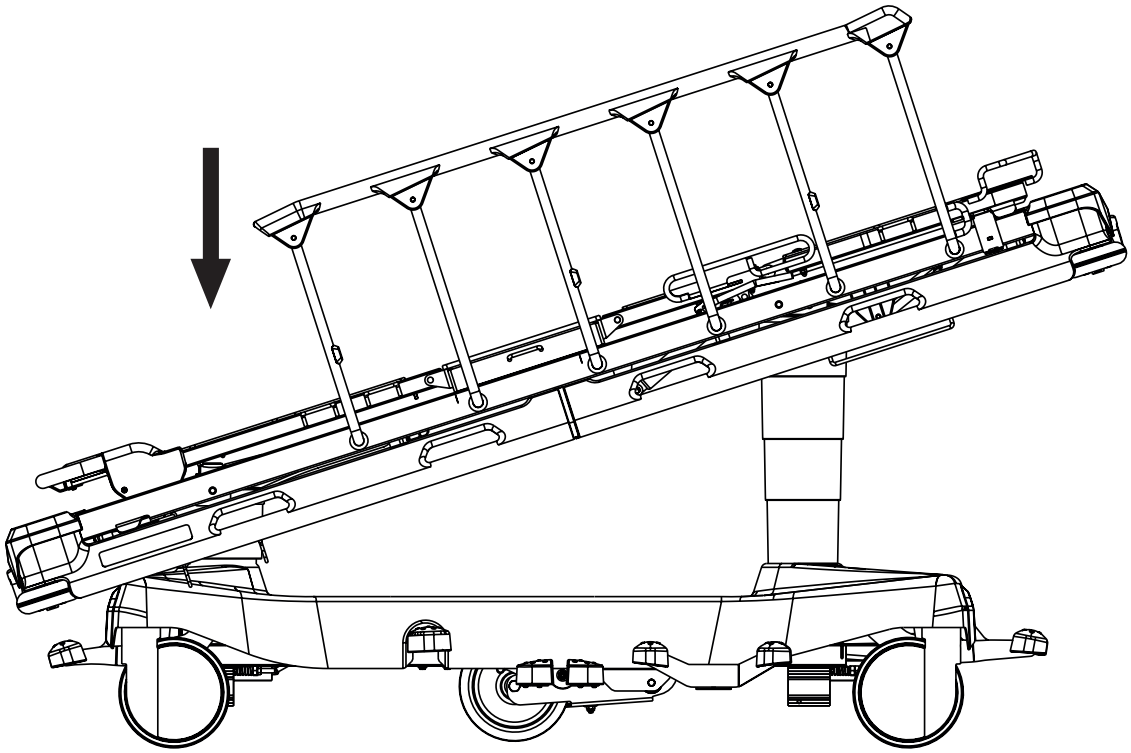

WARNING!
Risk of injury due to improper use of Trendelenburg Position!
► Hospital staff is responsible for assessing if the physical and psychological state of the patient is in accordance with use of the Trendelenburg Position.
► Hospital staff is responsible for assessing whether used bedclothes increase the risk of patient´s sliding from the bed!

To reach Trendelenburg position:

► press Head End Lowering pedal until intended position is reached

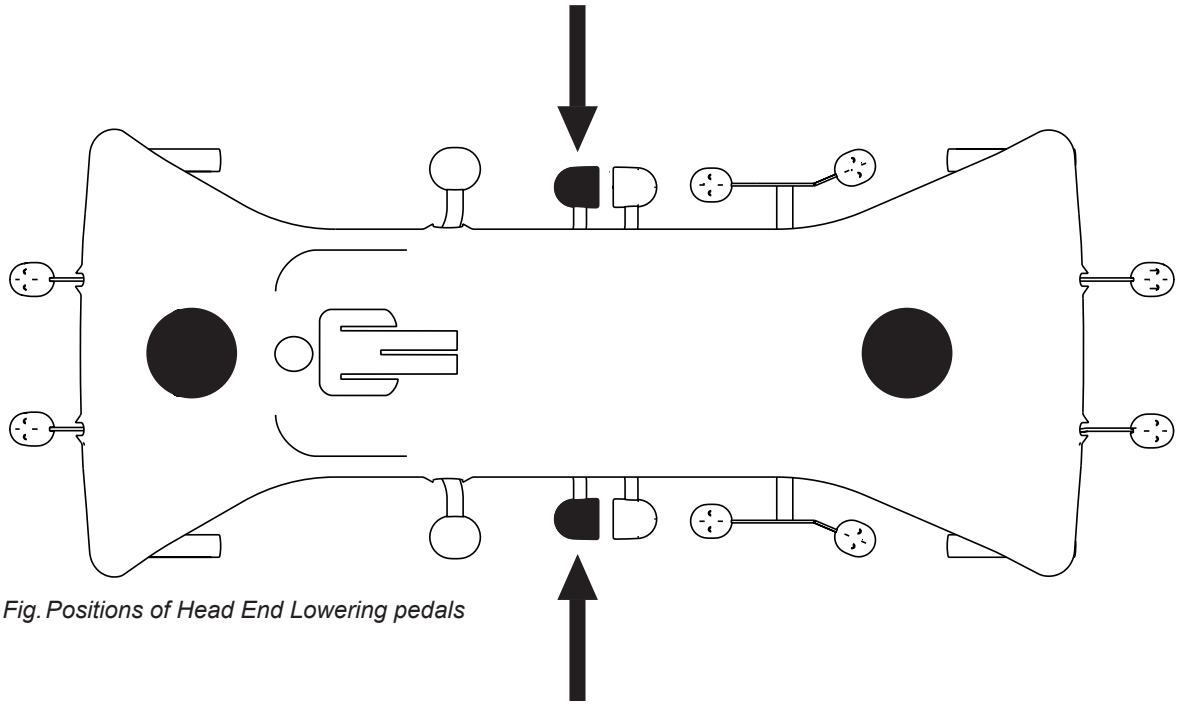

Fig. Positions of Head End Lowering pedals

10.3.7 Anti-Trendelenburg Tilt

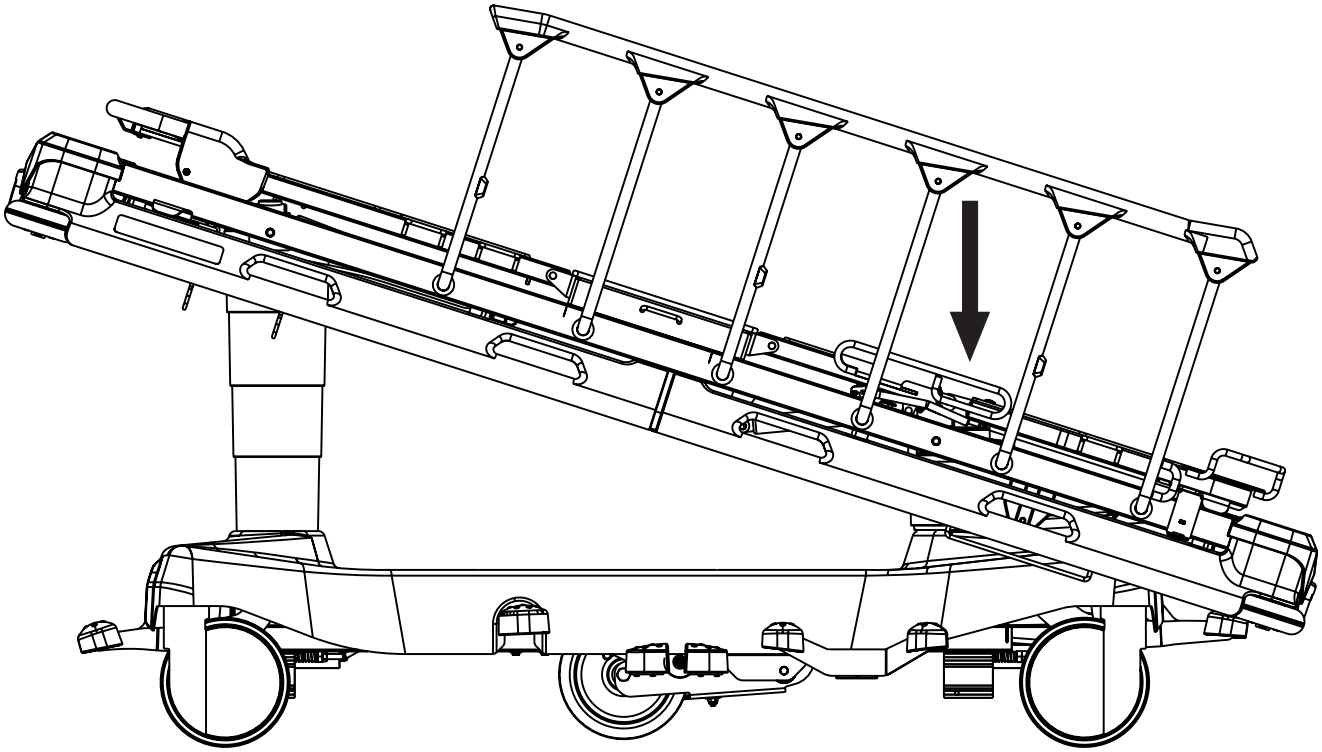

WARNING!
Risk of injury due to patient´s sliding!
► Hospital staff is responsible for assessing whether used bedclothes increase the risk of patient´s sliding from the bed!

To reach Anti-Trendelenburg Tilt:

► press Foot End Lowering pedal until intended position is reached

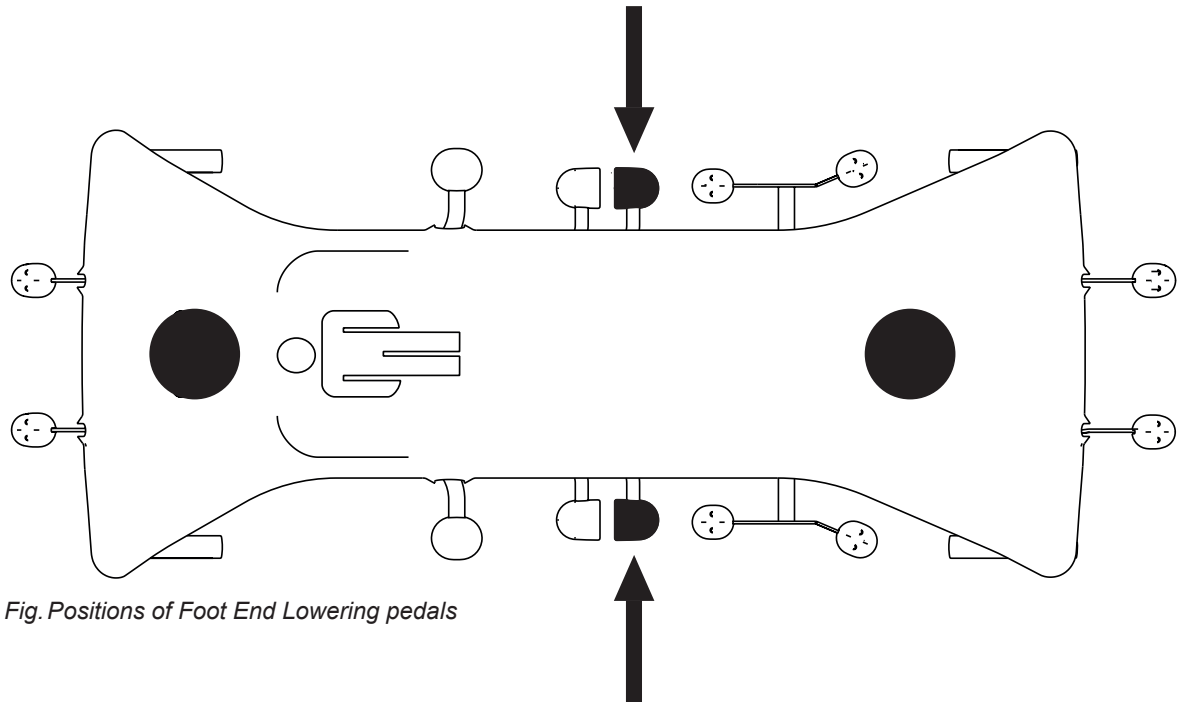

Fig. Positions of Foot End Lowering pedals

10.3.8 Cardiac Chair Position (only 4-part Mattress Support Platform)

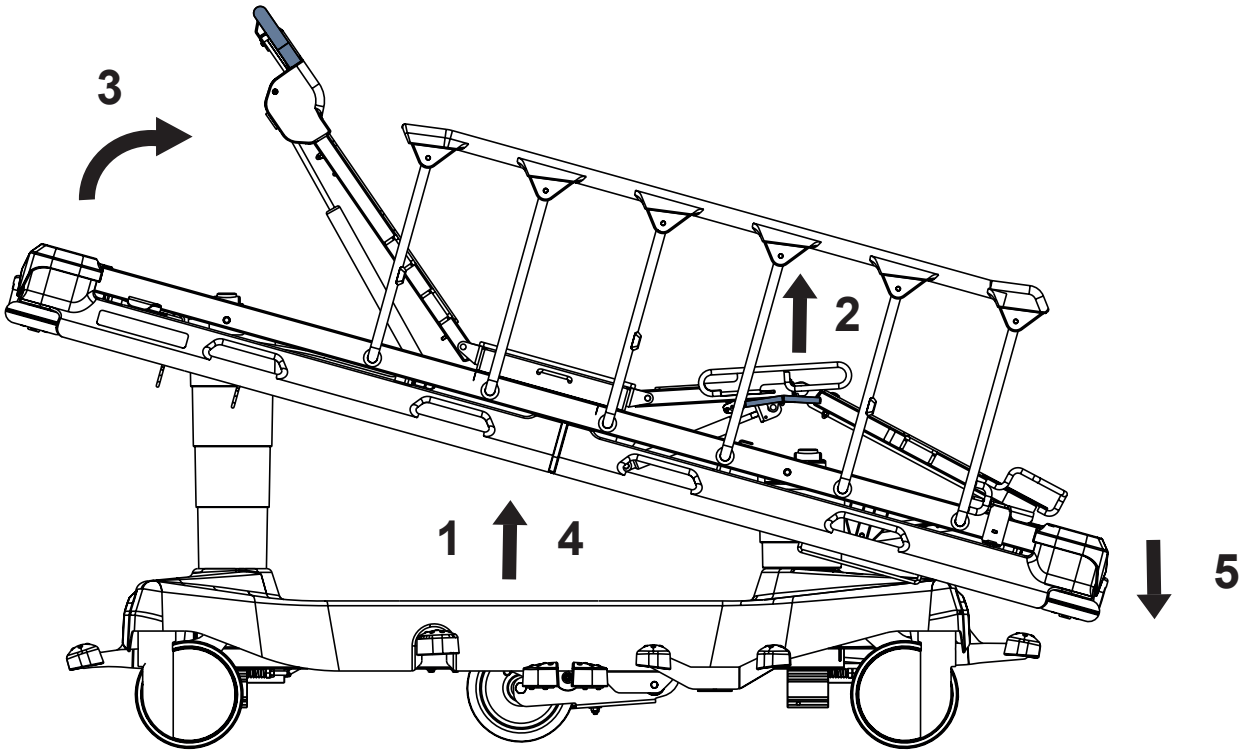

To reach Cardiac Chair Position:

► lift the Mattress Support Platform to facilitate Thighrest and Backrest positioning (**1**)
► lift the Thighrest (**2**)
► lift the Backrest (**3**)
► lift the Mattress Support Platform to the maximum position (**4**)
► use Foot End Lowering pedal until intended position is reached (**5**)

10.4 CPR Backrest Release

In order to adjust Mattress Support Platform for Cardiopulmonary Resuscitation (CPR) it is necessary to position Backrest to the lowest position and Mattress Support Platform to the lowest position. In the case of Mattress Support Platform with 4 sections position Backrest and Thighrest to the lowest position and Mattress Support Platform to the lowest position.

10.4.1 The 2-part Mattress Support Platform

Set the position as follows:

► Adjust Backrest to the lowest position.
► Adjust Mattress Support Platform to the lowest position.

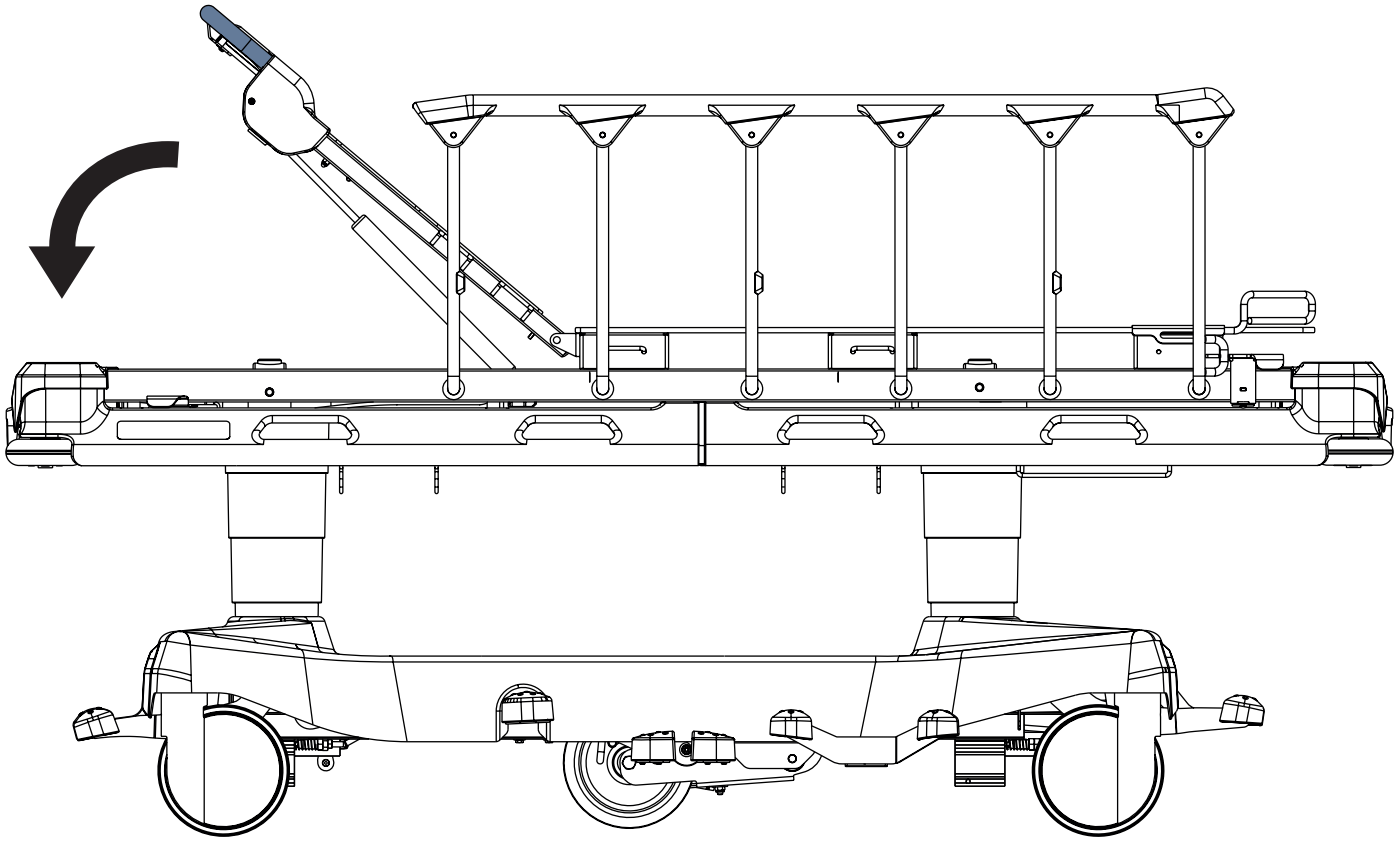

Fig. Preparation for Cardiopulmonary Resuscitation (2-part Mattress Support Platform)

10.4.2 The 4-part Mattress Support Platform

Set the position as follows:

► Adjust Backrest and Thighrest to the lowest position.
► Adjust Mattress Support Platform to the lowest position.

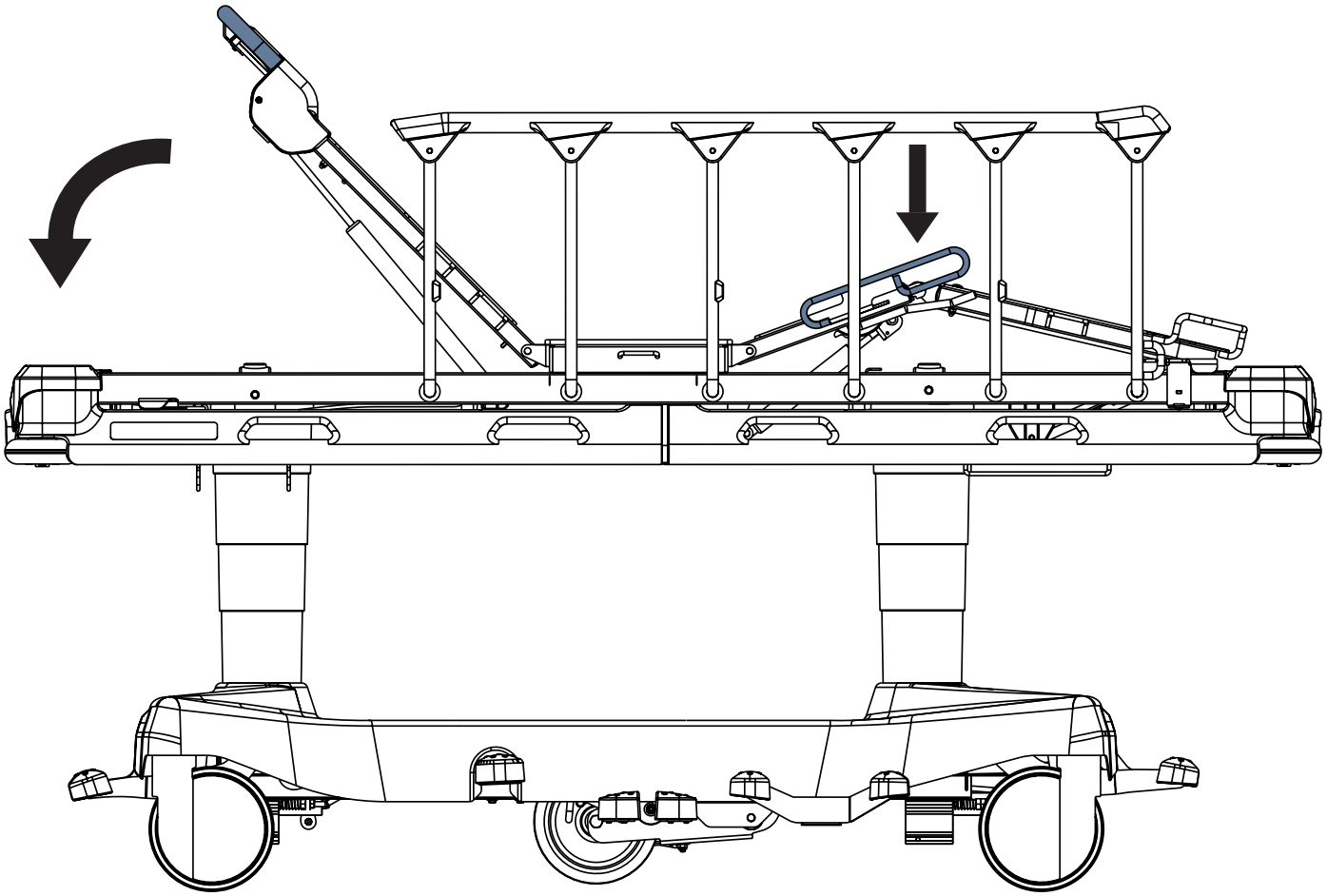

Fig. Preparation for Cardiopulmonary Resuscitation (4-part Mattress Support Platform)

11 Equipment

Product equipment depends on product configuration.

11.1 Accessory Holders (optional)

Accessory holders are intended for hanging accessories.

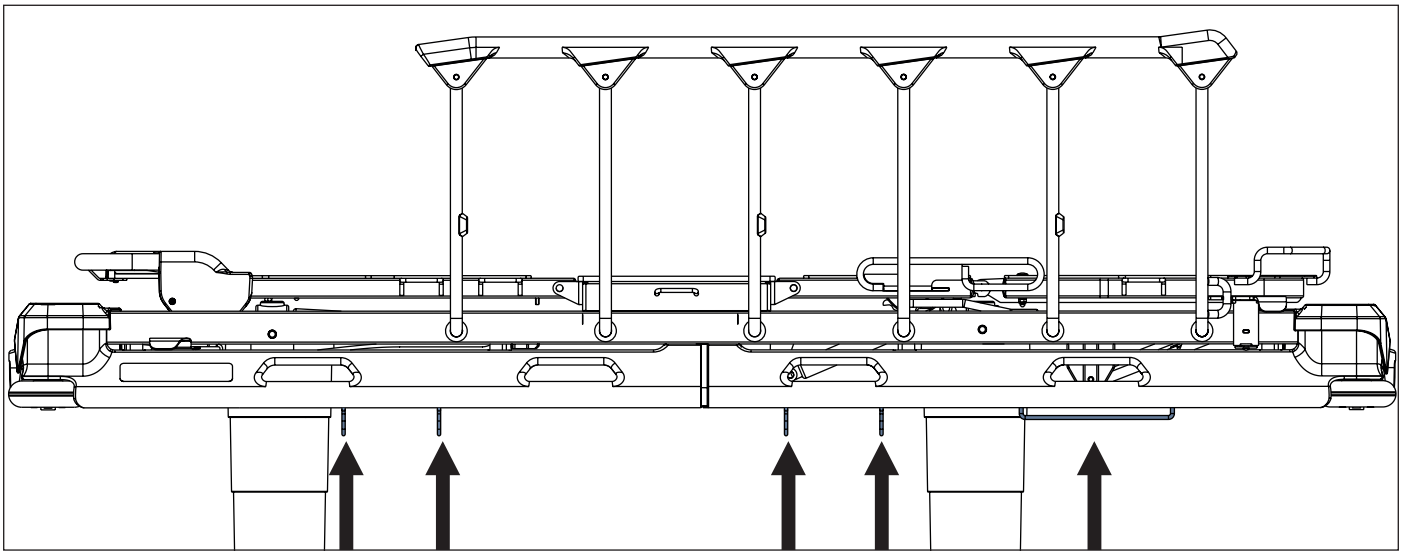

Fig. Accessory holders - 4 hooks (on side)

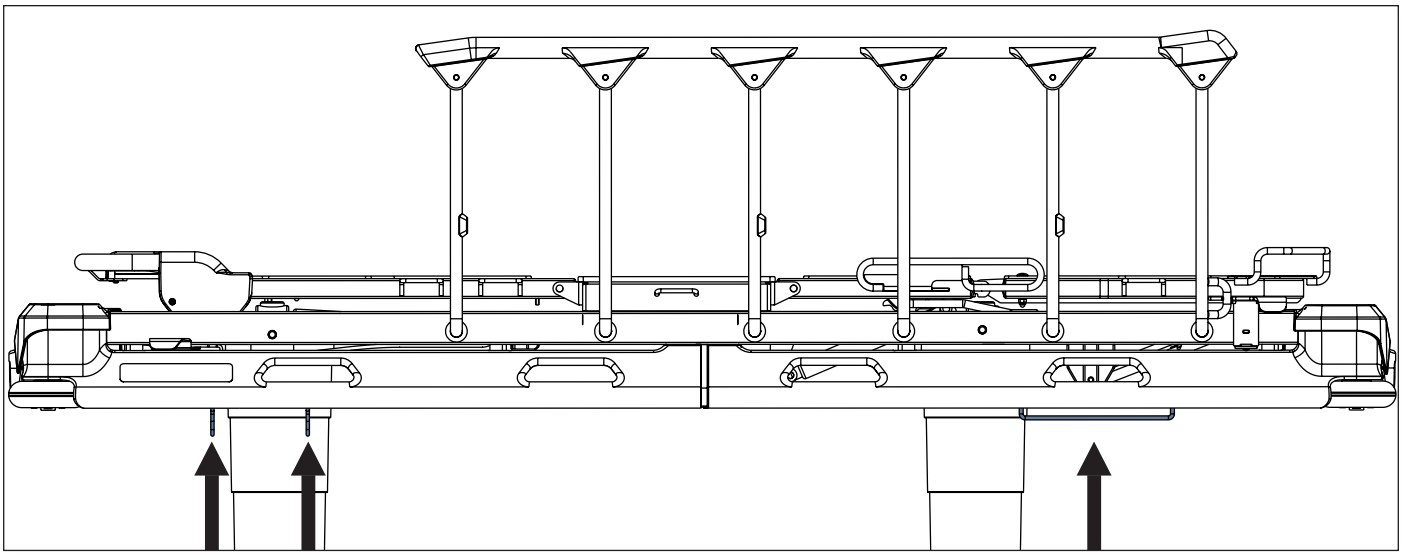

Fig. Accessory holders - 2 hooks (on side)

11.2 Accessory Rail with plastic hooks

CAUTION!
It is not recommended to place the hooks suspended on the accessory rail and the accessories suspended on these hooks directly above the pedals on the sides of Sprint 100 in order to facilitate the use of pedals during bed height adjustment and the use of brake pedals during bed transport!

Accessory rail with 4 plastic hooks is intended for hanging accessories.
It is located on the sides of bed or at head end / foot end.

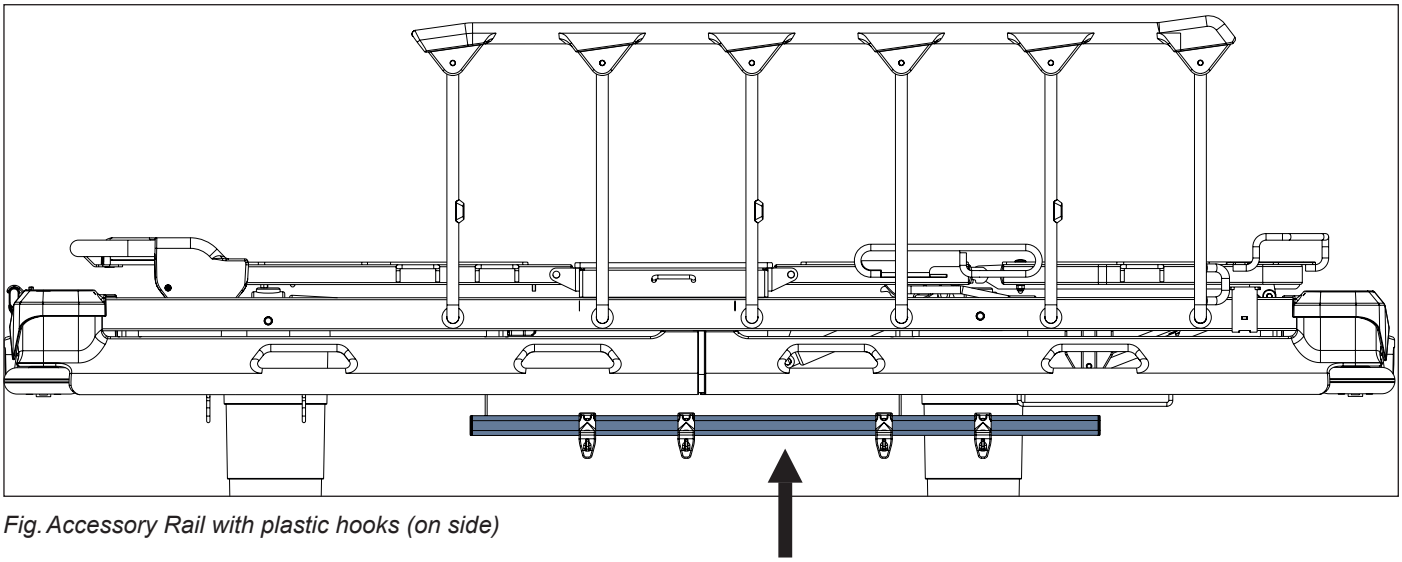

Fig. Accessory Rail with plastic hooks (on side)

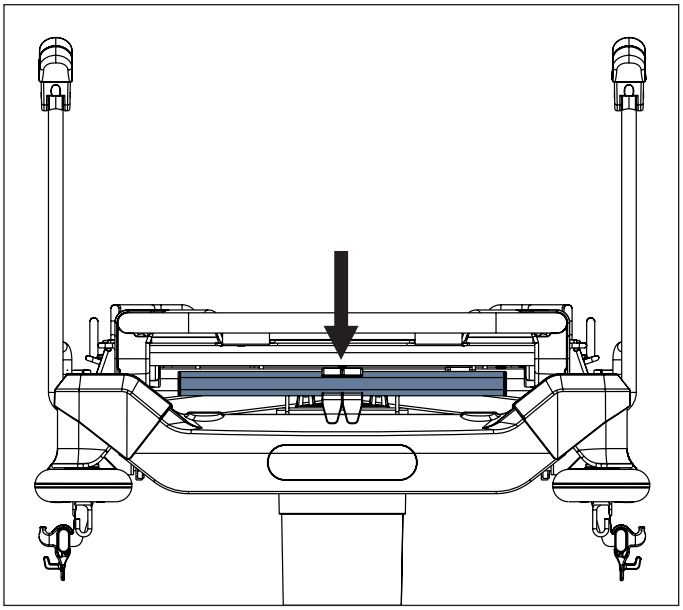

Fig. Accessory Rail with plastic hooks (at head end or foot end)

11.3 DIN Rail

DIN Rail is intended for hanging accessories.
It is located on the sides of bed or at head end / foot end.

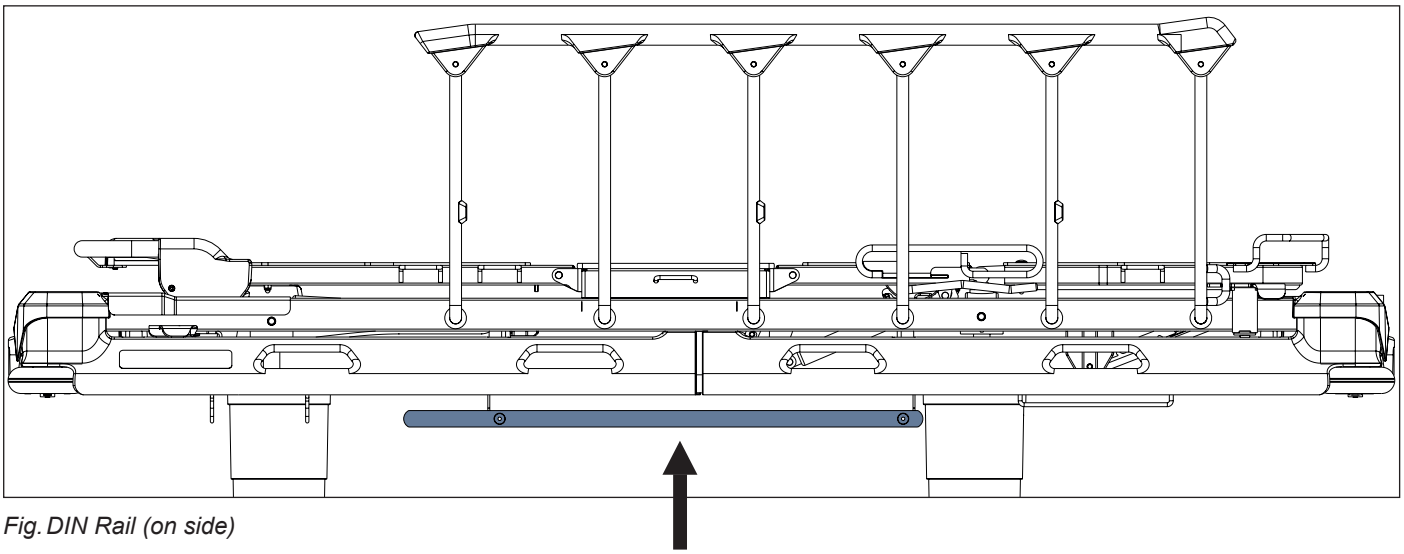

Fig. DIN Rail (on side)

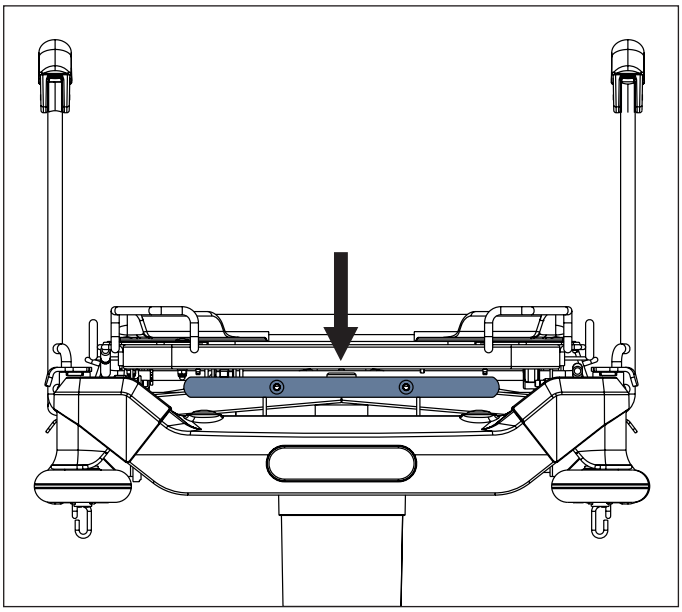

Fig. DIN Rail (at head end or foot end)

11.4 Undercarriage Cover

CAUTION!
Risk of material damage due to objects on the undercarriage cover!
► Do not place objects on the undercarriage cover outside storage space!
► Respect dimensions of objects placed in storage spaces of the undercarriage cover during lifting, lowering and tilting of the bed!

There are 2 types of storage spaces of the undercarriage cover. Longitudinal storage spaces (**1**) are intended for oxygen bottle (with capacity 10 litres (type E only), 5 litres or less). Suitable oxygen bottle can be fixed with quick-release strap. Rectangular storage space (**2**) is intended for objects with maximum height of 25 cm.

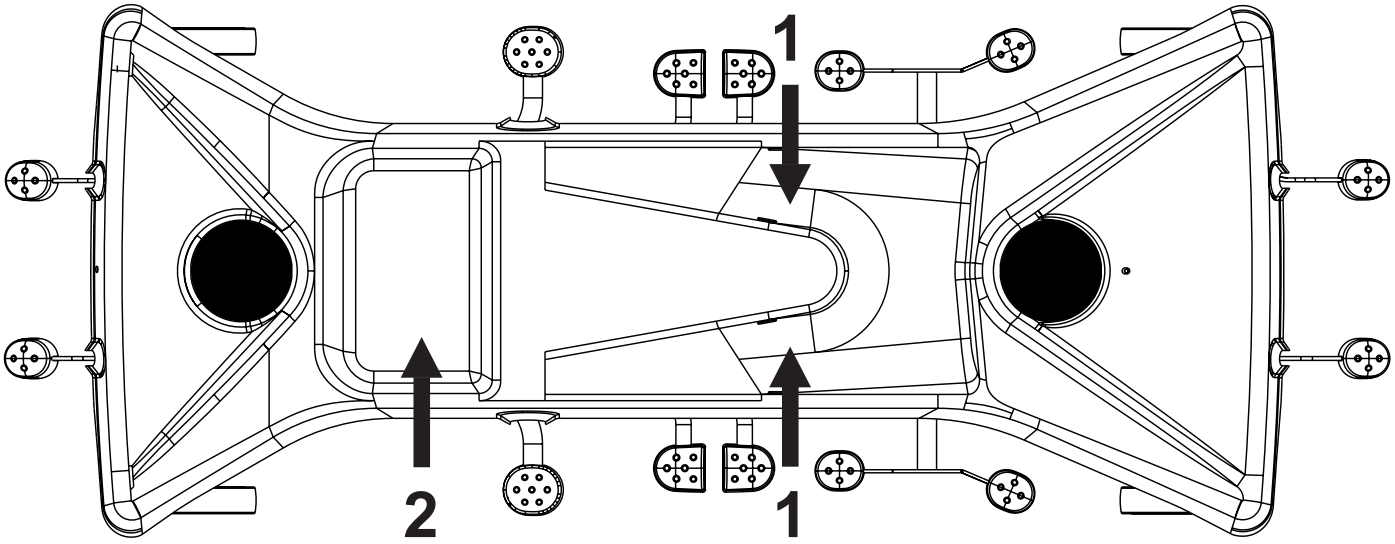

Fig. Storage spaces (Undercarriage Cover)

11.5 FlexiDrive (Sprung Retractable Fifth Castor)

During middle position of pedals Sprung Retractable Fifth Castor is around 12 mm above floor.
When bed is braked Sprung Retractable Fifth castor is around 65 mm above floor.

To activate the Fifth castor:

► Press green Drive pedal to the lower position.

To retract the Fifth castor:

► Leave all Brake pedals and Drive pedals unpressed in their middle position.

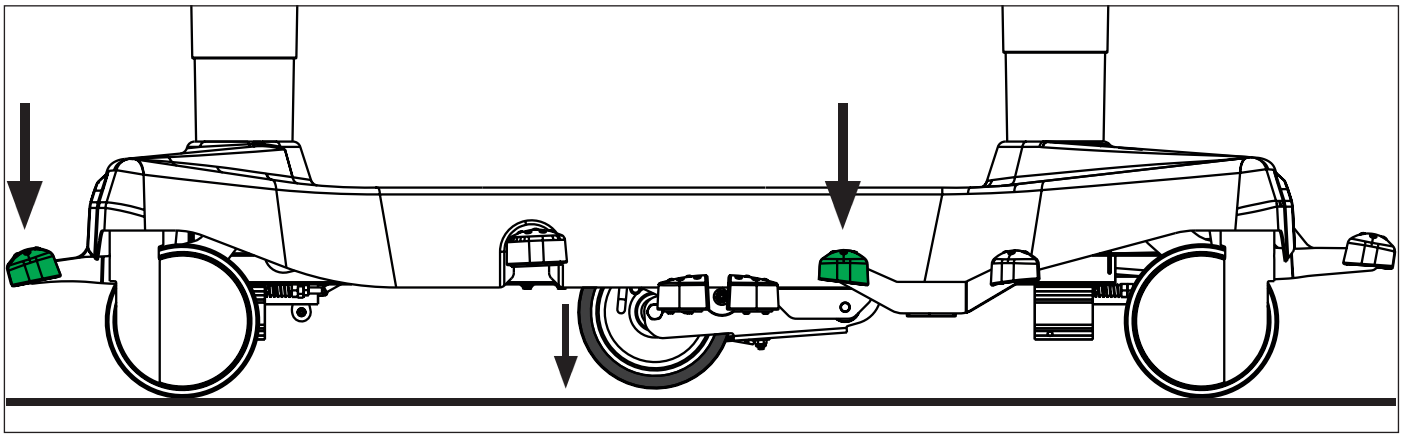

Fig. Activation of Fifth castor

11.6 IV&Drive (Foldable Infusion Stands)

WARNING!
Risk of injury due to incorrect placement of an infusion pump!
► Ensure the infusion pump on the Foldable infusion stand will not collide with any movable parts of the Sprint 100 (especially Backrest) or with the patient!

CAUTION!
Risk of material damage due to incorrect placement of an infusion pump!
► Place an infusion pump carefully on the orange non-telescopic part of the Foldable infusion stand in order to prevent the risk of injury or damage!

Foldable infusion stand equipped with 2 hooks is intended for carrying IV bags or baskets for intravenous solutions.
The pair of Foldable infusion stands can serve as handles for bed transport when they are raised.
It is possible to extend height of the Foldable infusion stand and to fold down the Foldable infusion stand again.
Pair of the Foldable infusion stands is located in corners of head end or foot end.
Maximum load of one hook is 5 kg.

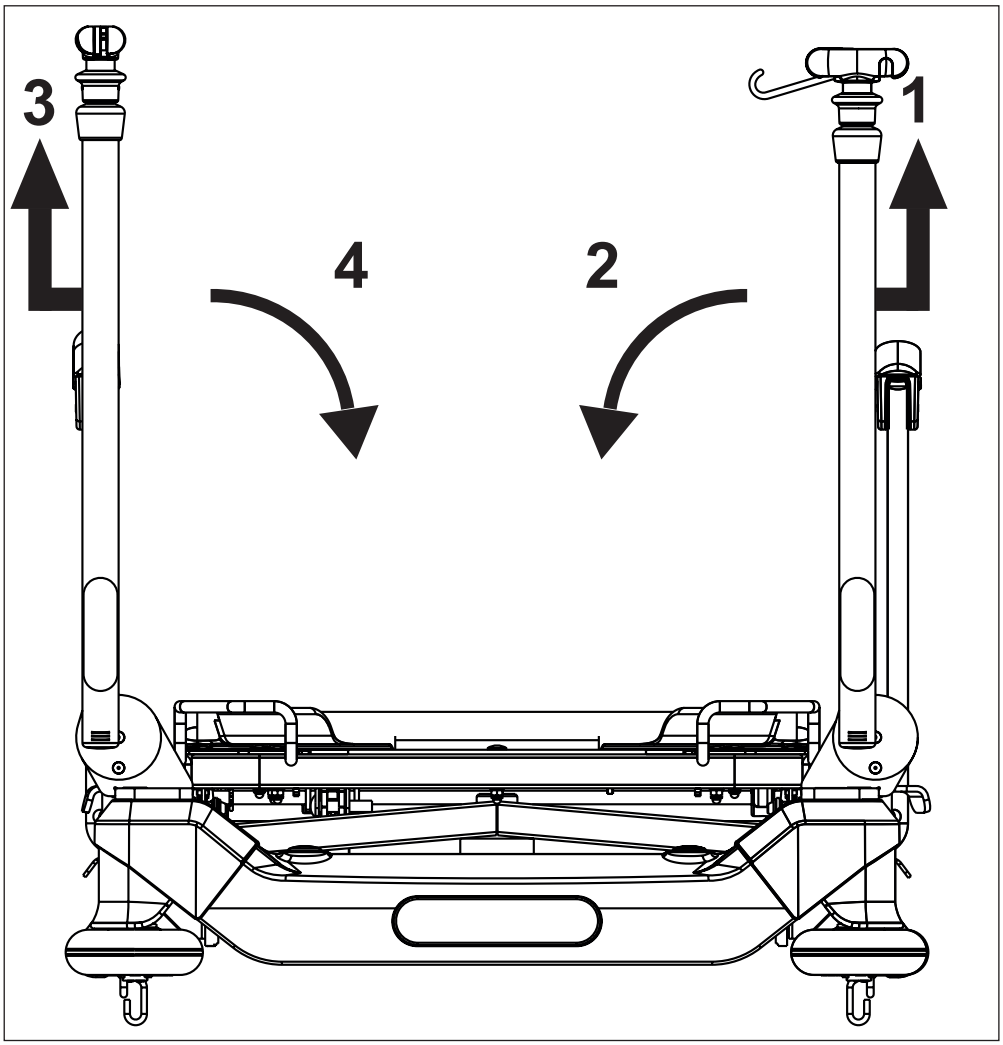

Fig. Pair of Foldable infusion stands (foot end)

To fold Foldable infusion stands down:

- ► Ensure the right Foldable infusion stand is not extended.
- ► Grasp orange bar of the right Foldable infusion stand.
- ► Lift the right Foldable infusion stand up (**1**) to unlock it.
- ► Fold the right Foldable infusion stand down (**2**).
- ► Ensure the left Foldable infusion stand is not extended.
- ► Grasp orange bar of the left Foldable infusion stand.
- ► Lift the left Foldable infusion stand up (**3**) to unlock it.
- ► Fold the left Foldable infusion stand down (**4**).

To lift Foldable infusion stands up:

- ► Grasp orange bar of the left Foldable infusion stand.
- ► Lift the left Foldable infusion stand up.
- ► Check if the left Foldable infusion stand is locked in place.
- ► Grasp orange bar of the right Foldable infusion stand.
- ► Lift the right Foldable infusion stand up.
- ► Check if the right Foldable infusion stand is locked in place.

To extend Foldable infusion stand:

- ► Put control ring up (**5**).
- ► Extend the Foldable infusion stand by taking its telescopic part out.

To shorten Foldable infusion stand:

- ► Put control ring up (**5**).
- ► Insert the telescopic part into the Foldable infusion stand.

To prepare hooks of the Foldable infusion stand:

- ► Take a hook out (**6**).

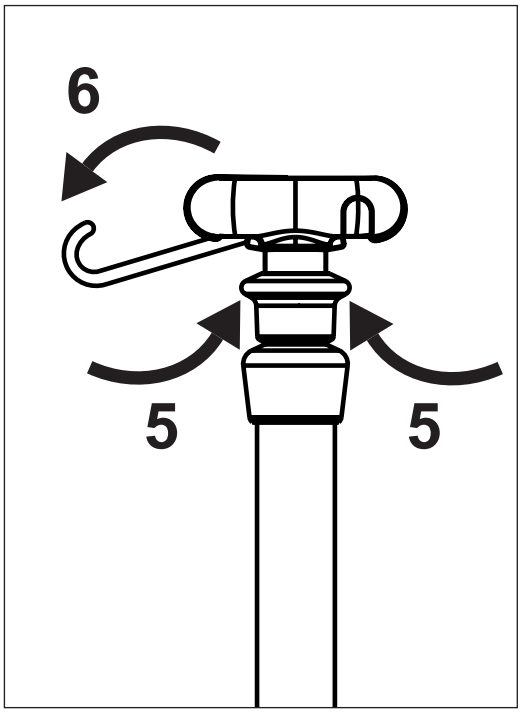

Fig. Control ring and hooks

11.7 Handles

Pair of handles is intended for bed transport.
The handles are located in head end corners or in foot end corners.
There are 3 types of the handles: removable, foldable or fixed in their positions.

11.7.1 Removable handles

Removable handles can be removed by pulling them out of their place in corners of the bed on head end or on foot end.

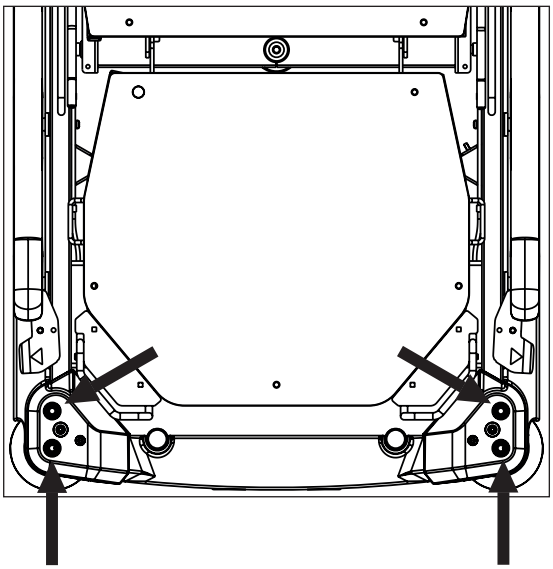

Fig. Positions for Removable handles

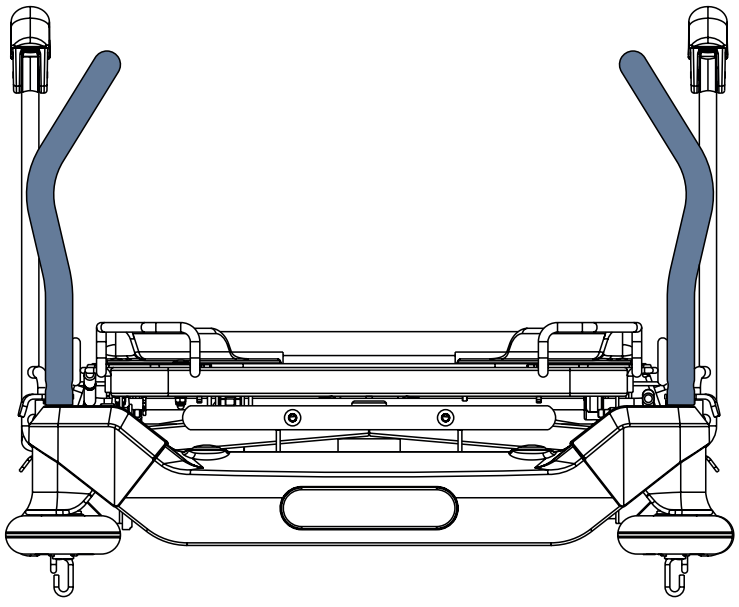

Fig. Removable handles (front view)

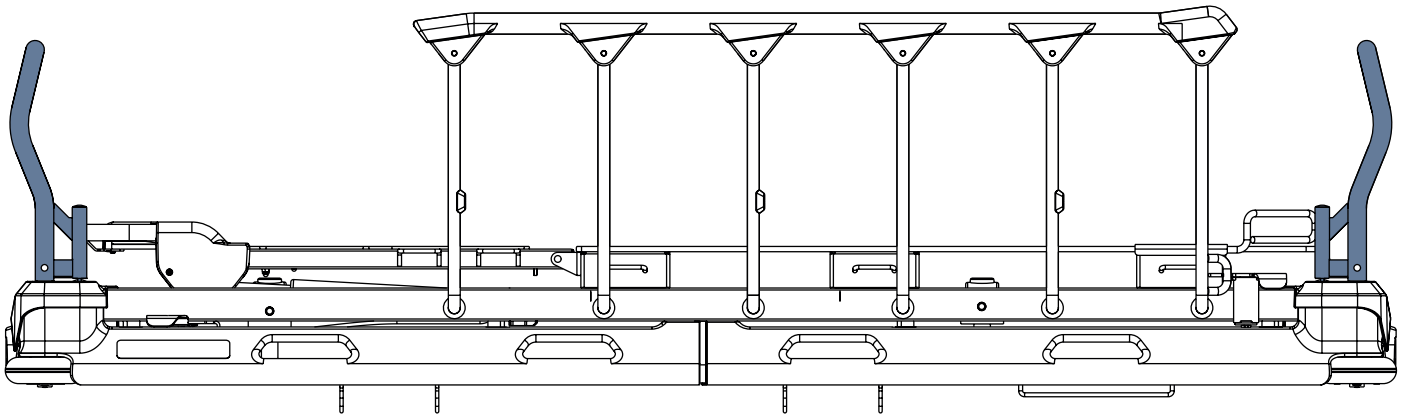

Fig. Removable handles on head end and on foot end (side view)

11.7.2 Foldable handles

To fold Foldable handle down:

► Lift the Foldable handle up (**1**) to unlock it.
► Fold the Foldable handle down (**2**).

To lift Foldable handle up:

► Lift the Foldable handle up.
► Check if Foldable handle is locked in place.

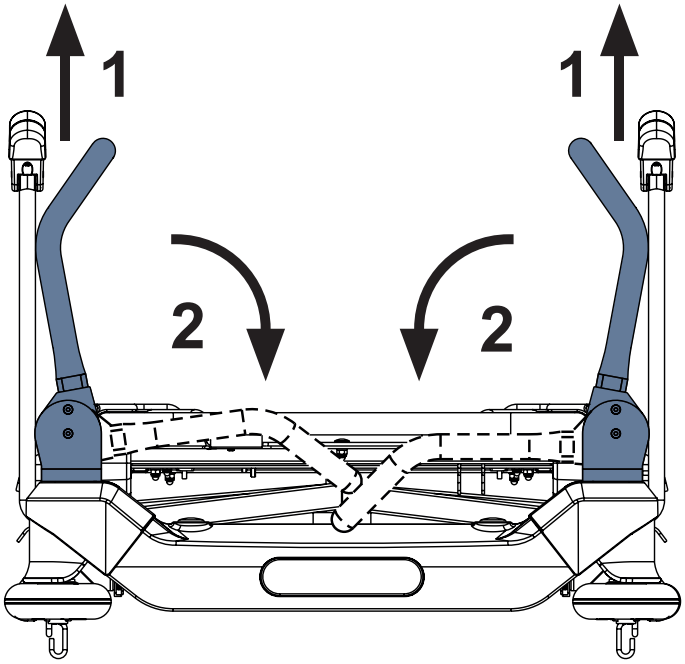

Fig. Foldable handles (front view)

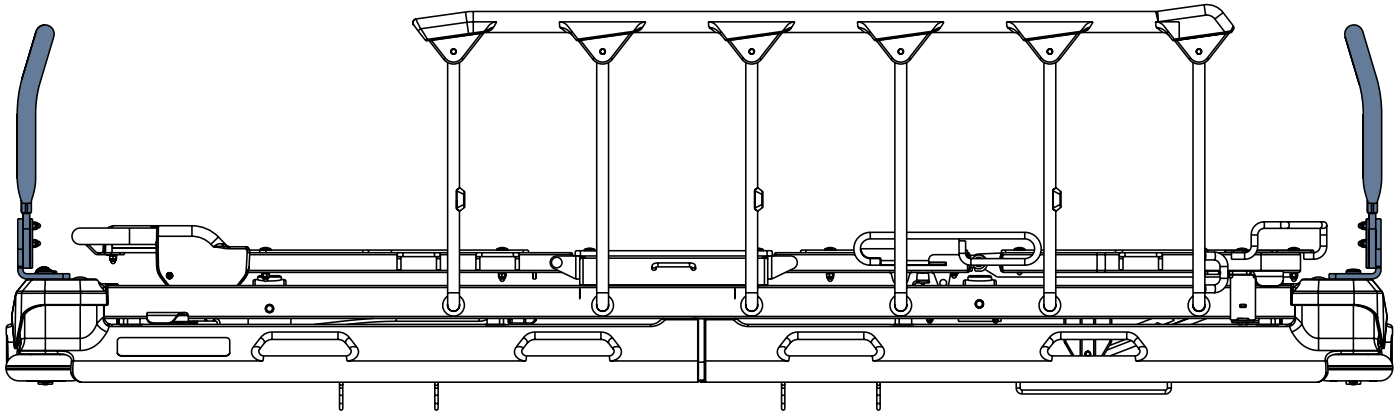

Fig. Foldable handles on head end and on foot end (side view)

11.7.3 Fixed handles

Fixed handles are screwed to corners of the bed on head end or on foot end. User is not allowed to change positions of the Fixed handles. Removal and installation must be performed by trained service technician according to the corresponding service instruction provided by manufacturer.

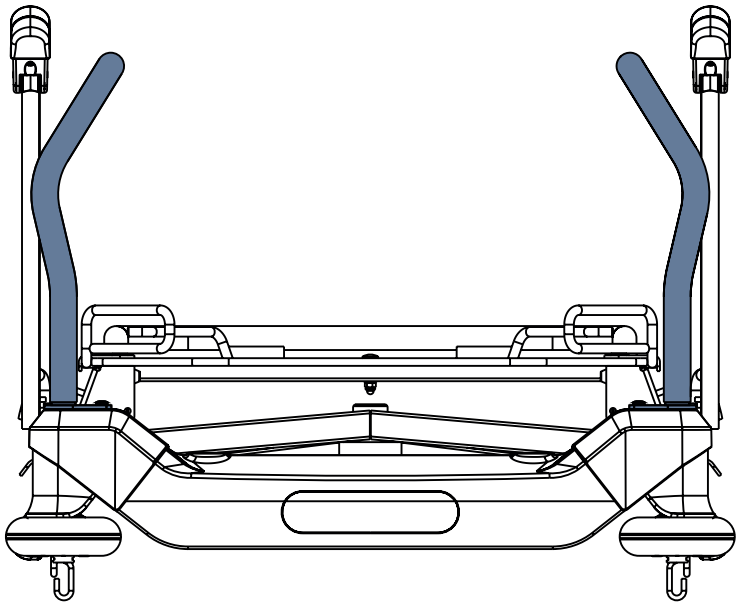

Fig. Fixed handles (front view)

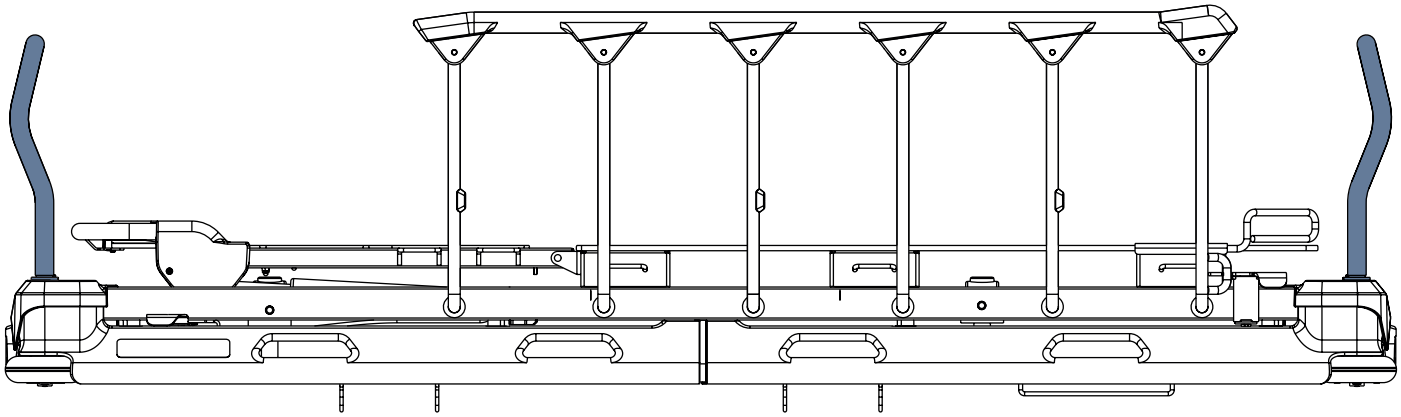

Fig. Fixed handles on head end and on foot end (side view)

11.8 Angle Indicators (optional)

Angle Indicators are optionally situated on both sides of the Backrest or on both sides of the Backrest and on both sides of Mattress Support Platform frame in seat section. Backrest angle indicators are intended for an approximate Backrest angle measurement. Angle indicators in the seat section are intended for an approximate measurement of Trendelenburg tilt and Anti-Trendelenburg tilt.

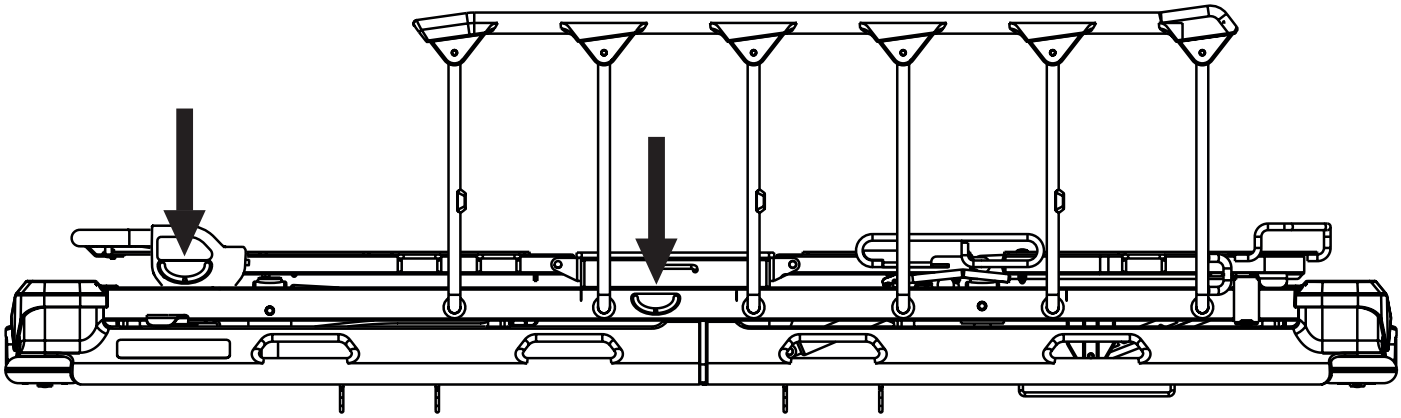

Fig. Angle Indicators

11.9 Examination with C-arm (in-bed fluoroscopy)

WARNING!
Respect dimensions of space intended for C-arm between undecarriage and Mattress Support Platform (88 cm x 39 cm and 44 cm x 32 cm)!
► Do not use a C-arm with dimensions exceeding the dimensions of space intended for C-arm!

WARNING!
Prevent C-arm and Sprint 100 bed from being damaged!
► Do not lower the Mattress Support Platform when using a C-arm!

WARNING!
Prevent C-arm from being damaged!
► Sprint 100 with hooks and accessory rails on the sides is not intended for use with C-arm!
► Sprint 100 with Wide Mattress Support Platform is not intended for use with C-arm!

CAUTION!
Prevent x-ray images from being devalued!
► Do not use Sprint 100 bed with Backrest which is not intended for use with C-arm!

Mattress Support Platform Covers are x-ray translucent. The construction of the bed allows C-arm-assisted operations (mainly cardiological operations such as temporary external cardiostimulation) without moving the patient. The in-bed C-arm examination is suitable above all for the unstable patients contraindicated to be moved. Sprint 100 beds intended for use with C-arm have different structure of the Backrest in order to avoid artifacts on the x-ray images.

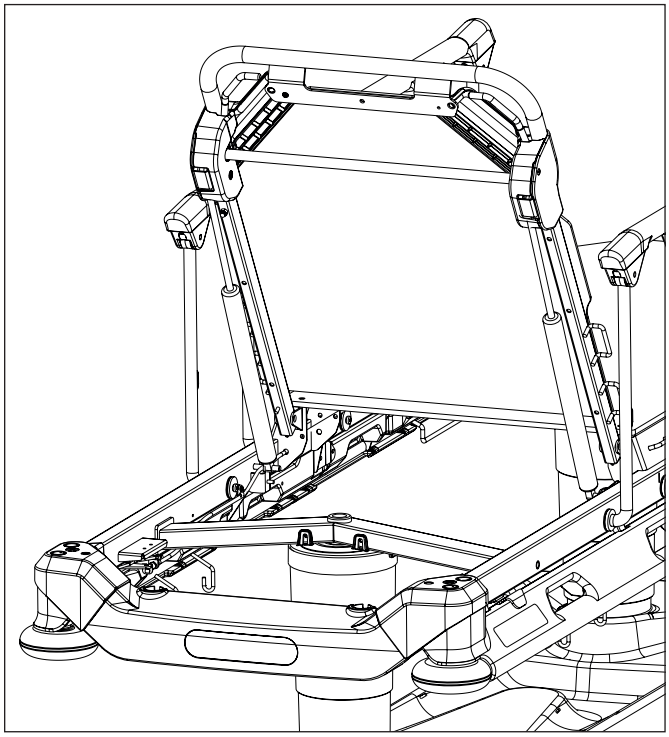

Fig. Sprint 100 intended for C-arm

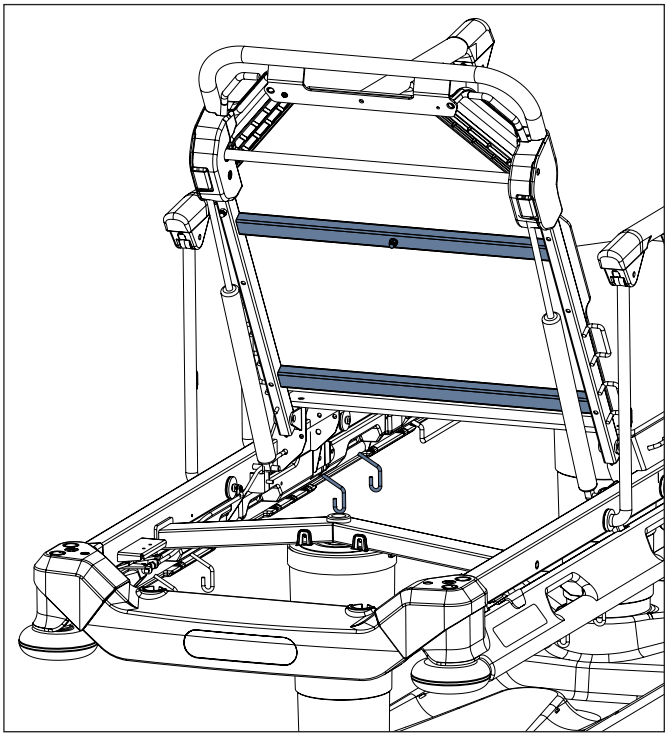

Fig. Sprint 100 not intended for C-arm

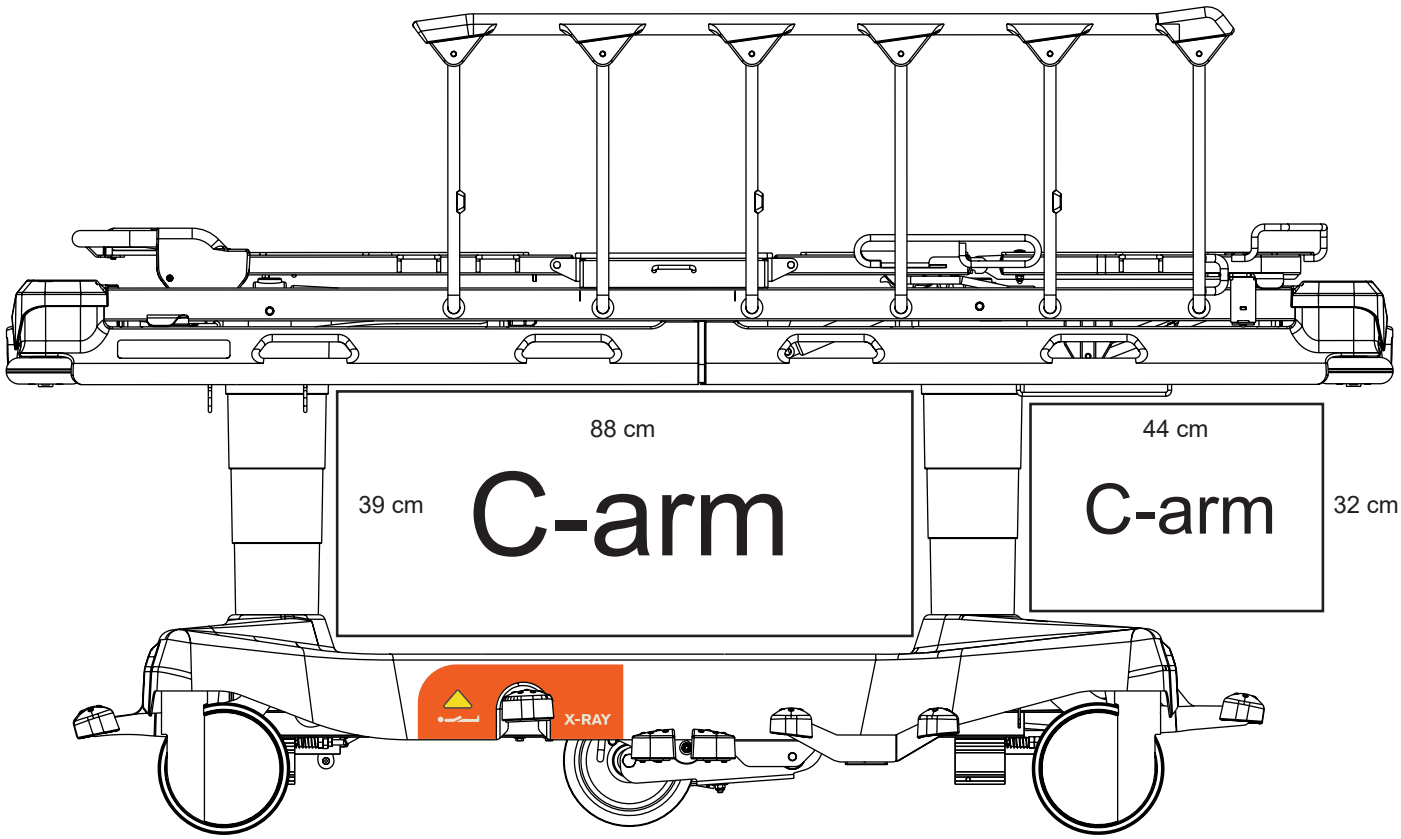

Fig. Space for the lower part of C-arm

Necessary steps before the examination with C-arm:

► Make sure that Mattress Support Platform is in the highest position.
► Position upper part of C-arm above the patient.
The x-ray tube of the C-arm is located between the undercarriage and the Mattress Support Platform.
► Adjust position of siderails accordingly - depending on the C-arm position.

NOTE In some cases the bed may cause artifacts on the x-ray image. Do the patient risk assessment accordingly and evaluate the positive effect on the in-bed examination versus impact of artifacts.

12 Mattress

CAUTION!
Incompatibility with bed due to incorrect mattress dimensions!
► In the case of other mattresses check maximum approved mattress dimensions (chapter Technical Specification) and its specific shape.

Sprint 100 bed is designed for special passive mattresses from LINET portfolio.
The manufacturer recommends the use of the following mattress systems on the Sprint 100 bed:

SPRINT 100 PASSIVE MATTRESSES

- **Sprint Standard**
- **Sprint Comfort**
- **Sprint Advanced**

Patient should not be transported on these mattresses from one place to another.

12.1 Anti-slip coating

CAUTION!
This anti-slip coating is not intended to prevent mattress movement when subjected to large forces so care must be taken during patient ingress & egress or with agitated patients.

CAUTION!
Placing any loose material such as sheets between the Sprint 100 mattress support platform and the bottom surface of the mattress will reduce the effect of the anti-slip coating and extra care must be taken during patient ingress & egress or with agitated patients.

The bottom surface of the Sprint 100 mattress has an ‘anti-slip’ coating. This is intended to help prevent the mattress moving around on the Sprint 100 mattress support platform during patient transport, mattress support platform articulation or whilst the patient is moving around.

12.2 Installation of Passive Mattress

The Sprint 100 passive mattresses are shaped to fit the Mattress Support Platform during bed positioning.

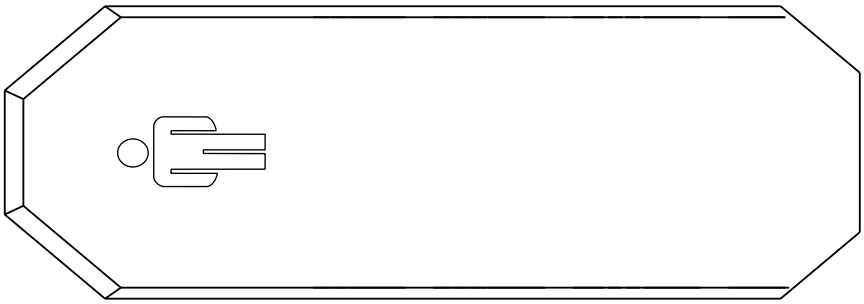

Fig. Passive Mattress (Sprint 100 with 2-part mattress support platform)

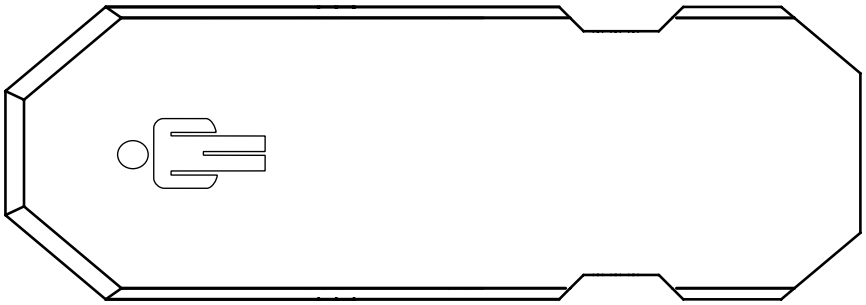

Fig. Passive Mattress (Sprint 100 with 4-part mattress support platform)

12.2.1 Straps with side release buckles

The Sprint 100 passive mattresses can be equipped with straps with buckles to fix mattress on the Mattress Support Platform.

To fix mattress on the Mattress Support Platform:

- ► Run four straps through the four corresponding holders on the frame of Mattress Support Platform.
- ► Lock the four side release buckles by connecting their male and female parts together.

To remove mattress from the Mattress Support Platform:

- ► Release the four buckles by pressing them from both sides and by disconnecting their male and female parts.
- ► Pull four straps out of the four holders on the frame of Mattress Support Platform.
- ► Remove mattress from the Mattress Support Platform.

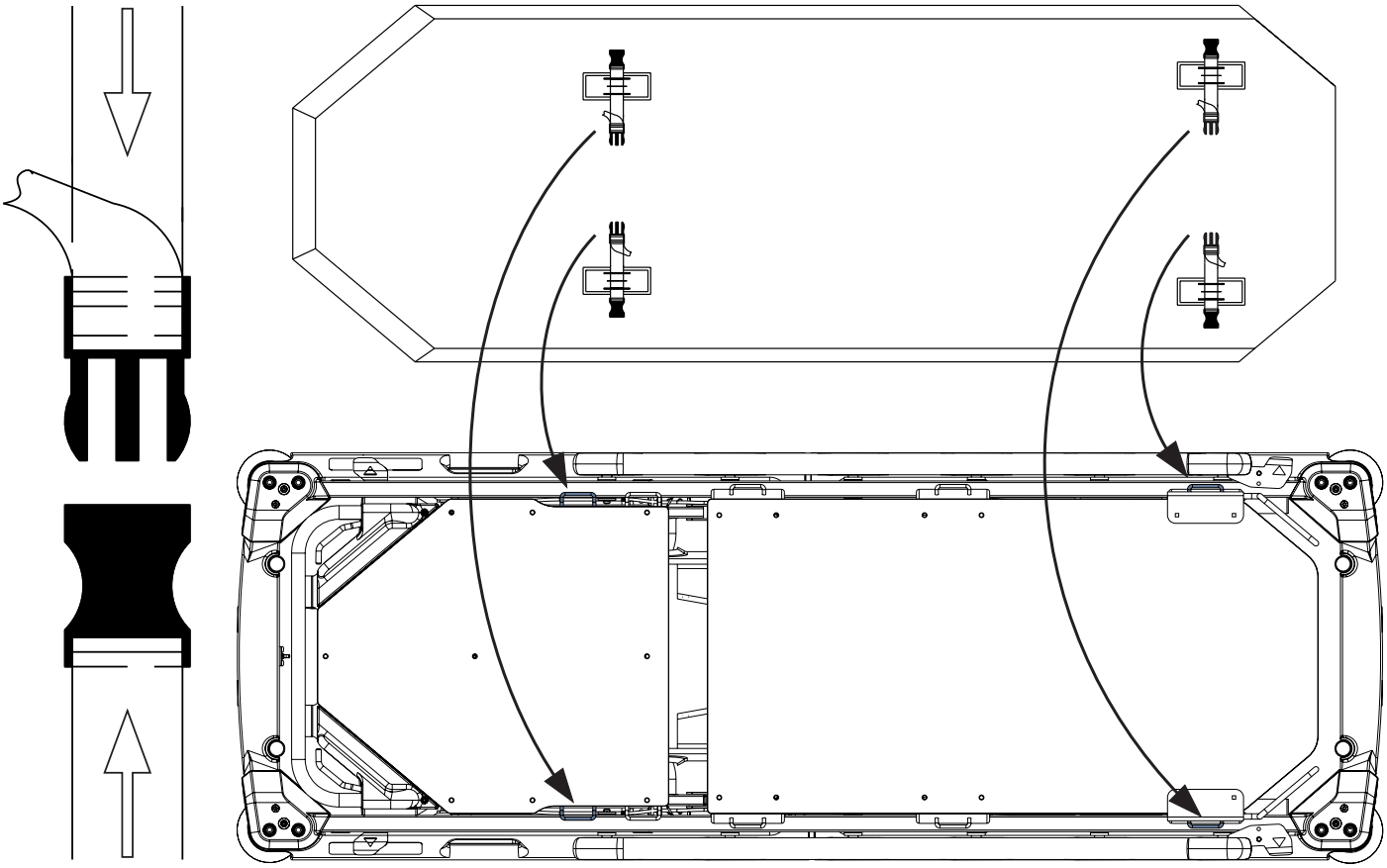

Fig. Fixation of mattress with straps on the Sprint 100 with 2-part mattress support platform

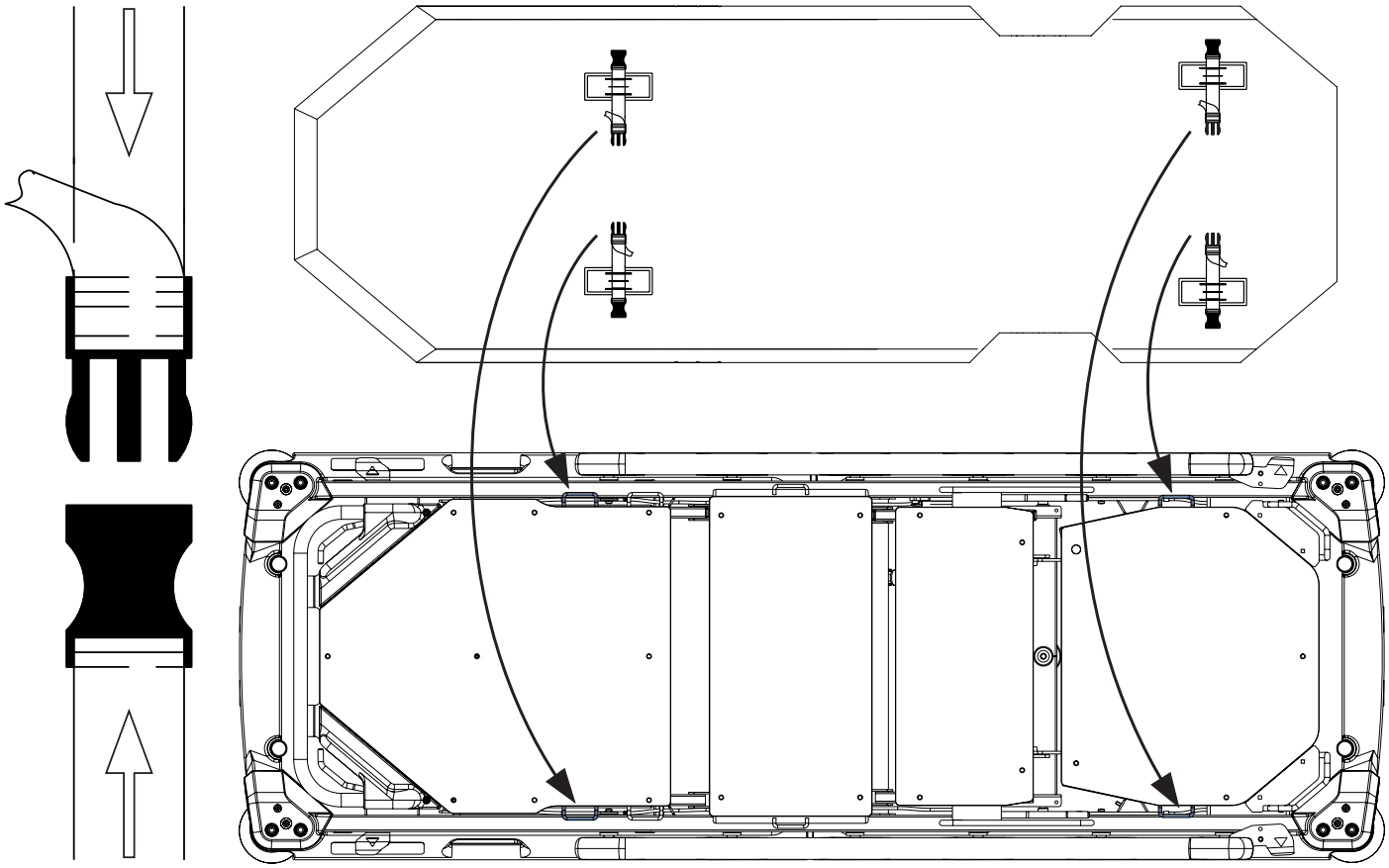

Fig. Fixation of mattress with straps on the Sprint 100 with 4-part mattress support platform

12.3 Mattresses Specifications

12.3.1 Sprint 100 with Standard Mattress Support Platform

MATTRESS FOR 2-PART MATTRESS SUPPORT PLATFORM

Specification	Sprint Standard	Sprint Comfort	Sprint Advanced
Length	193 cm	193 cm	193 cm
Width	66 cm	66 cm	66 cm
Height	8 cm	10 cm	13 cm
Maximum Mattress Weight		7 kg	
Foam Type	one sided	one sided	one sided
Number of Layers	1	2	2
Used Materials (Foam)	Polyurethan	Polyurethan + Viscoelastic	Polyurethan + Viscoelastic
Thermo-sensitive Top Layer	✕	✕	✔
Vapour Permeability (Cover)	✔	✔	✔
Antislip Feature (Base Cover)	✔	✔	✔
Fluid Resistance (Cover)	✔	✔	✔
Stretchable Material (Cover)	4 way stretch	4 way stretch	4 way stretch
Zipper with Zipper Protection	270°	270°	270°
Patient Weight Limit	150 kg	200 kg	250 kg

MATTRESS FOR 4-PART MATTRESS SUPPORT PLATFORM

Specification	Sprint Standard	Sprint Comfort	Sprint Advanced
Length	193 cm	193 cm	193 cm
Width	66 cm	66 cm	66 cm
Height	8 cm	10 cm	13 cm
Maximum Mattress Weight		7 kg	
Foam Type	one sided	one sided	one sided
Number of Layers	1	2	2
Used Materials (Foam)	Polyurethan	Polyurethan + Viscoelastic	Polyurethan + Viscoelastic
Thermo-sensitive Top Layer	✕	✕	✔
Vapour Permeability (Cover)	✔	✔	✔
Antislip Feature (Base Cover)	✔	✔	✔
Fluid Resistance (Cover)	✔	✔	✔
Stretchable Material (Cover)	4 way stretch	4 way stretch	4 way stretch
Zipper with Zipper Protection	180°	180°	180°
Patient Weight Limit	150 kg	200 kg	250 kg

12.3.2 Sprint 100 with Wide Mattress Support Platform

MATTRESS FOR 2-PART STANDARD MATTRESS SUPPORT PLATFORM

Specification	Sprint Advanced	Sprint Comfort
Length	193 cm	193 cm
Width	76 cm	76 cm
Height	13 cm	10 cm
Maximum Mattress Weight	11 kg	
Foam Type	one sided	one sided
Number of Layers	2	2
Used Materials (Foam)	Polyurethan + Viscoelastic	Polyurethan + Viscoelastic
Thermo-sensitive Top Layer	✔	✘
Vapour Permeability (Cover)	✔	✔
Antislip Feature (Base Cover)	✔	✔
Fluid Resistance (Cover)	✔	✔
Stretchable Material (Cover)	4 way stretch	4 way stretch
Zipper with Zipper Protection	270°	270°
Patient Weight Limit	250 kg	200 kg

MATTRESS FOR 4-PART STANDARD MATTRESS SUPPORT PLATFORM

Specification	Sprint Advanced	Sprint Comfort
Length	193 cm	193 cm
Width	76 cm	76 cm
Height	13 cm	10 cm
Maximum Mattress Weight	11 kg	
Foam Type	one sided	one sided
Number of Layers	2	2
Used Materials (Foam)	Polyurethan + Viscoelastic	Polyurethan + Viscoelastic
Thermo-sensitive Top Layer	✔	✘
Vapour Permeability (Cover)	✔	✔
Antislip Feature (Base Cover)	✔	✔
Fluid Resistance (Cover)	✔	✔
Stretchable Material (Cover)	4 way stretch	4 way stretch
Zipper with Zipper Protection	180°	180°
Patient Weight Limit	250 kg	200 kg

12.4 Cleaning of Passive Mattress

CAUTION!
Incorrect cleaning/disinfection can damage the mattress!
- ► Do not use pressure or steam cleaners.
- ► Follow the instructions and observe the dosages recommended by the manufacturer.
- ► Ensure that disinfectants are selected and applied by qualified hygiene experts only.
- ► The surface of the mattress should not be exposed to liquids for a long time.

12.4.1 General Guidance

For safe and gentle cleaning:

- ► Do not use any strong acids or alkalines, (optimum pH range 6 – 8. Do not exceed pH of 9).
- ► Only use detergents that are suitable for cleaning medical equipment.
- ► Do not use abrasive powders, steel wool, or other material and cleaning agents that might damage the mattress. Do not scrub mattress surface.
- ► Never use any corrosive or caustic detergents.
- ► Never use detergents that deposit calcium carbonate.
- ► Never use detergents with solvents that might affect the structure and consistency of the plastics (benzene, toluene, acetone etc.).
- ► Use only hospital-approved cleaners and observe local directives concerning infection control.
- ► Always rinse with water after cleaning and dry thoroughly before use.
- ► Observe local directives concerning infection control.

Mattress parts to be cleaned	Recommended Cleaning Agents (General Cleaning
Top Cover, Bottom Cover	Standard hospital detergents, Alcohol or Quaternary Ammonium based disinfectants, Chlorine based disinfectants containing up to 0,1% Chlorine, followed by rinsing with water and drying thoroughly before use.
	Decontamination: Blood spills/C-diff. etc
	Chlorine based disinfectants containing up to 0,1% Chlorine. Dwell time on surface at 0,1% of 5 minutes, followed by rinsing with water and drying thoroughly before use.
Mattress Core	**Do not clean!**

Due to the variety of laundry equipment, chemicals and conditions in use, customers should satisfy themselves through pretesting. It is essential that cover be thoroughly rinsed and dried after all cleaning procedures and before storage or reuse. Wet or damp PU surfaces are more prone to mechanical damage than when dry.

As stated above, after application of a suitable cleaner, the surface must be rinsed with water and dried before use. (Even if the cleaner instructions say that this is not required). This prevents a build-up of chemicals on the mattress surface which could be reactivated during use and affect biocompatibility.

NOTE Continued use of high concentration, chlorine-based disinfectants may significantly reduce the performance and the working life of a coated material.

NOTE If disinfecting is not required, cleaning with soap and water should be enough to remove dirt stains.

NOTE Cleaning and disinfecting products based on solvent, bleach, abrasives or very high (over 70%) alcohol concentrations can damage this product.

Type of Cleaning	Parts to be cleaned
Routine Cleaning and Disinfection	external of mattress cover
Full Cleaning and Disinfection	external of mattress cover

12.4.2 Routine Cleaning and Disinfection

Cleaning the mattress:

► Check mattress cover top for any signs of damage or for liquid ingress.
► Replace or repair and completely disinfect mattress cover top if damaged. Also check if the mattress core is not contaminated. In case of core contamination, do not use the mattress and dispose the core ecologically.
► Leave mattress cover on mattress.
► Clean with water with cleaning detergent.
► Rinse mattress with cold water.
► Let mattress air dry or wipe dry.
► Wipe mattress with disinfectant and rinse mattress with cold water.
► Let mattress dry or wipe dry.

12.4.3 Complete Cleaning and Disinfection

Cleaning Top/Bottom Cover:

Use standard hospital detergents, Alcohol based cleaners or Quaternary Ammonium based disinfectants. Suitable Chlorine based cleaners can be used at a concentration of 0,05%. Stronger concentrations of chlorine can be used if required, (up to 0,1%), with a maximum dwell time of five minutes followed by rinsing with water and drying thoroughly before use.

After application of a suitable cleaner, the surface should be rinsed with water and dried before use. (Even if the cleaner instructions say that this is not required). This prevents a build up of chemicals on the mattress surface that could reactivate during use and affect biocompatibility.

Cleaning the mattress:

► Check mattress cover top and base for any signs of damage.
► Replace or repair and completely disinfect mattress cover top and base if damaged. Also check if the mattress core is not contaminated. In case of core contamination, do not use the mattress and dispose the core ecologically.
► Leave mattress cover on mattress.
► Clean with water with cleaning detergent.
► Rinse mattress with cold water.
► Let mattress air dry or wipe dry.
► Wipe mattress with disinfectant.
► Rinse mattress with cold water.
► Let mattress air dry or wipe dry.

Machine washing of the top/base mattress covers:

► Remove cover.
► If machine washing mattress top/base covers, the temperature should be raised during the wash cycle, to 71°C/160° F, for 3 - 10 minutes, using hospital approved detergents and rinsing agents.
► Dry cover in tumble dryer at low temperature.

NOTE Maximum wash temperature 75°C (but it decreases lifetime period of the product).

12.4.4 Mattress Core

The entire core of the mattress does not require any major cleaning. The core does not need disinfection. Once a month it is recommended to ventilate the mattress core (remove the mattress cover and leave the mattress core on ventilated area for 12 -24 hours). The mattress core cannot be washed by water or by disinfection.

13 Accessories



WARNING!
Risk of injury due to incompatible accessories!
► Use exclusively original accessories from the manufacturer.
The manufacturer is not responsible for the use of unapproved accessories.



WARNING!
Risk of injury due to damaged accessories!
► Use exclusively accessories in perfect condition.

Compatible Accessories	Identification Numbers	Compatible Configurations	
		Sprint 100 with Standard Mattress Support Platform (2-part Mattress Support Platform and 4-part Mattress Support Platform)	Sprint 100 with Wide Mattress Support Platform (2-part Mattress Support Platform and 4-part Mattress Support Platform)
Infusion Stand	4MAS6016306	✔	✔
Telescopic Infusion Stand	4PV348405X00	✔	✔
Chart Holder	11023900A0000	✔	✔
Monitor Shelf	11026300A0009	✔	✕
Paper Roll Holder	11013700A0000	✔	✔
Storage Space	1106000080002	✔	✕
Storage Space	11060000800WD	✕	✔
Oxygen Bottle Holder	11026300A0010	✔	✕
X-Ray Cassette Holder	adjustable holder: 11026300A0012 fixed holder: 11026300A0011	✔	✕

13.1 Infusion Stand

WARNING!
Risk of injury due to incorrect placement of an infusion pump!
► Ensure the infusion pump on the Infusion stand will not collide with any movable parts of the Sprint 100 (especially Backrest) or with the patient!

WARNING!
Risk of injury and risk of material damage due to incorrect use!
► Do not use the infusion stand as driving/pushing device during the bed transport.

Infusion Stand is intended for carrying IV bags or baskets for intravenous solutions.
It can be located in bushings for accessories at a bed corner.
Maximum load of one hook is 5 kg.

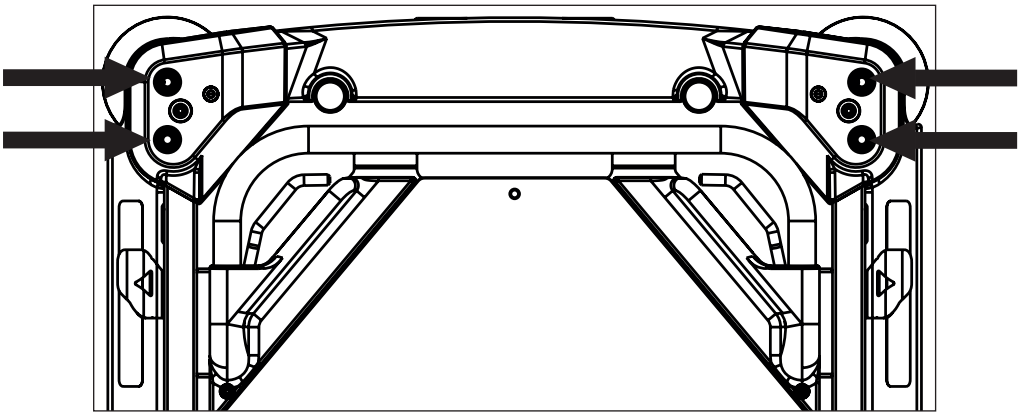

Fig. Positions for Infusion Stand

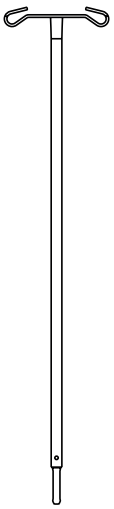

Fig. Infusion stand (at bed end corners)

13.2 Telescopic Infusion Stand



CAUTION!
Risk of material damage due to incorrect placement of an infusion pump!
► Place an infusion pump carefully on the telescopic part of the Telescopic Infusion Stand in order to prevent the telescopic part from being damaged!



WARNING!
Risk of injury due to incorrect placement of an infusion pump!
► Ensure the infusion pump on the Infusion stand will not collide with any movable parts of the Sprint 100 (especially Backrest) or with the patient!



WARNING!
Risk of injury and risk of material damage due to incorrect use!
► Do not use the infusion stand as driving/pushing device during the bed transport.

Telescopic Infusion Stand is intended for carrying IV bags or baskets for intravenous solutions.
It can be located in bushings for accessories at a bed corner.
Maximum load of the Telescopic Infusion Stand is 20 kg.

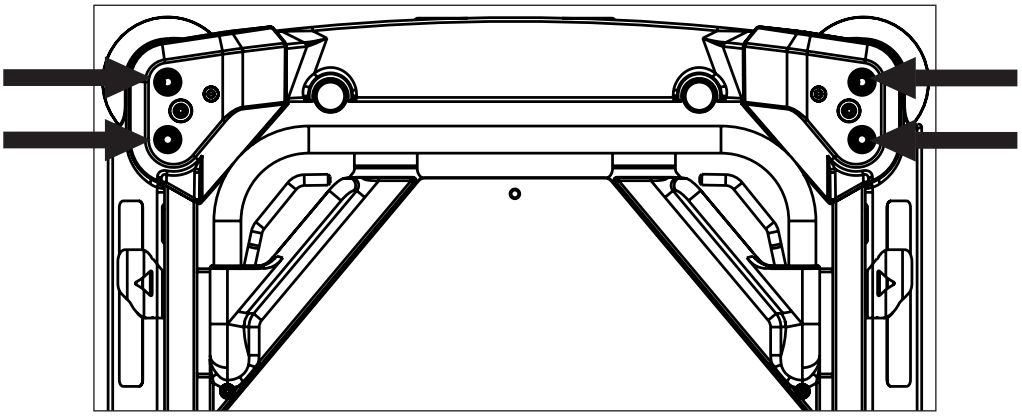

Fig. Positions for Telescopic Infusion Stand

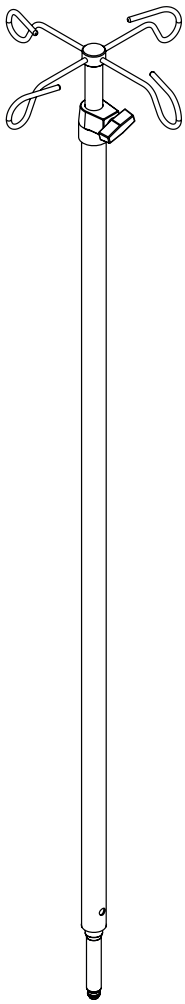

Fig. Telescopic Infusion stand (at bed end corners)

13.3 Chart Holder

Chart Holder is intended for placing charts, which are registering the development of health condition of the patient.
Chart Holder is located on a siderail.

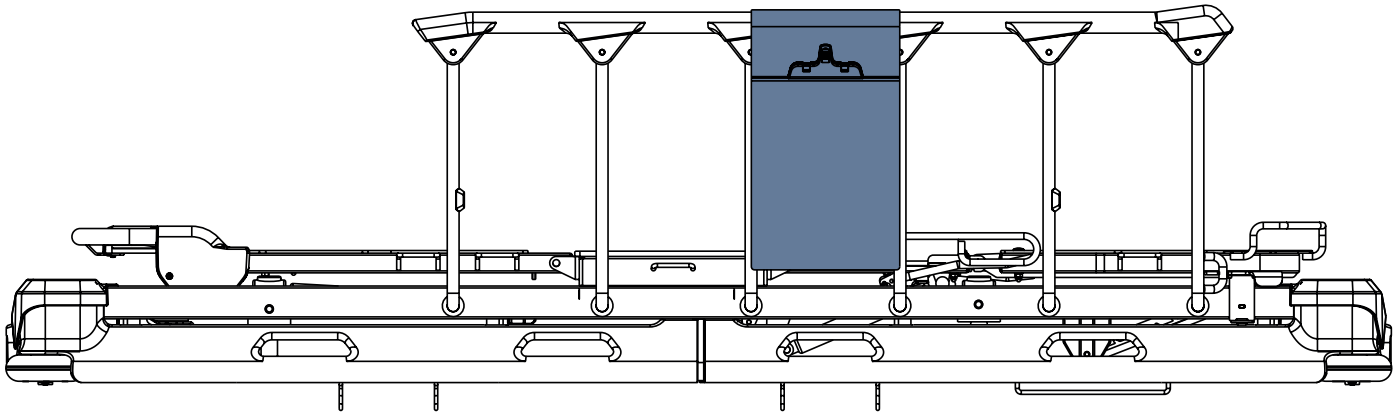

Fig. Chart Holder (on siderail)

13.4 Monitor Shelf

Monitor shelf is intended for carrying a monitor when the monitor shelf is folded inwards the bed (**4**). When the monitor shelf is folded outwards the bed (**3**) it serves for writing. When the monitor shelf is folded down (**2**) it serves as a foot board. Monitor shelf is equipped with straps to fix a monitor on the monitor shelf. Maximum load of the monitor shelf in position for carrying a monitor (**4**) and for writing (**3**) is 15 kg.

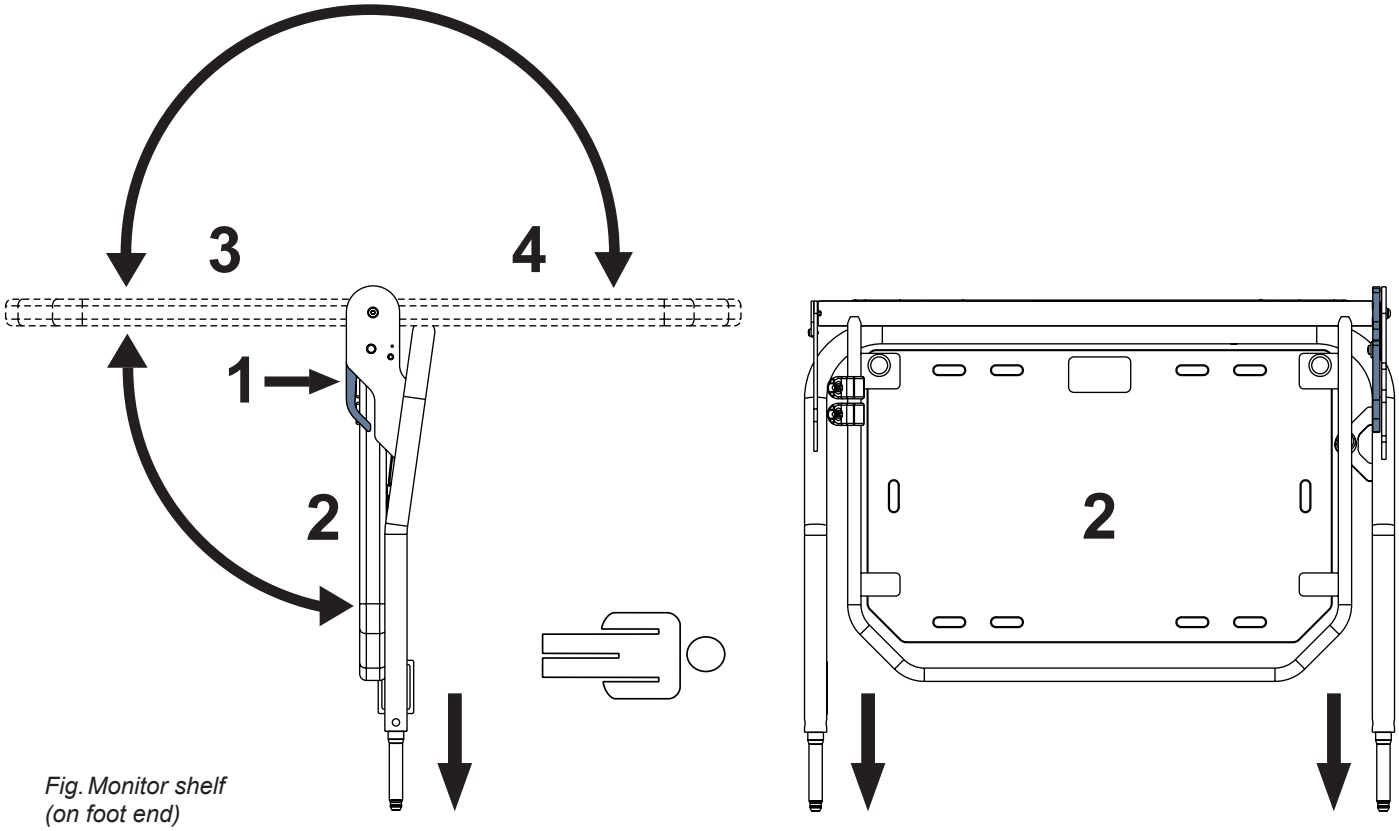

Fig. Monitor shelf (on foot end)

To change position of the board:

- ► Pull a control lever (**1**).
- ► Change position of the board.
- ► Release the control lever (**1**) in order to the control lever latches.
- ► Move the board up and down to ensure the board is fixed.



Fig. Instruction for placement of the monitor shelf to the bed end

HOOKS

The position of hooks placed on the frame of Monitor Shelf can be changed to a more convenient position!

Respect maximum load of the Monitor Shelf when hanging things on the hooks!

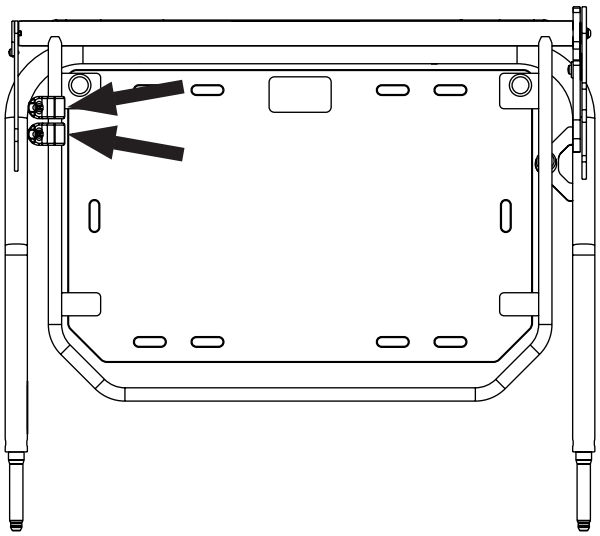

13.5 Paper Roll Holder

Paper Roll Holder is intended for holding a paper bed sheet.
Paper Roll Holder is located at foot end.
On the opposite bed end, the paper bed sheet can be fixed under the mattress.

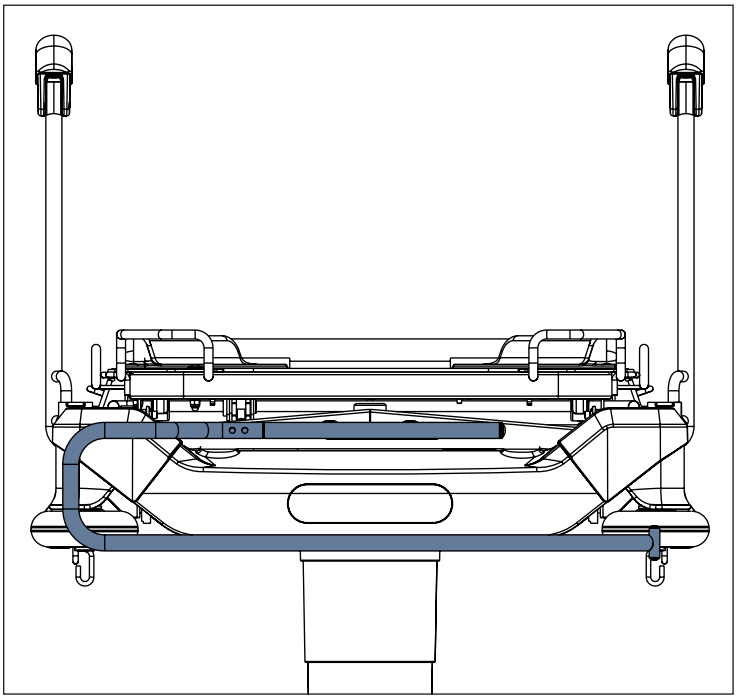

Fig. Paper Roll Holder (at foot end)

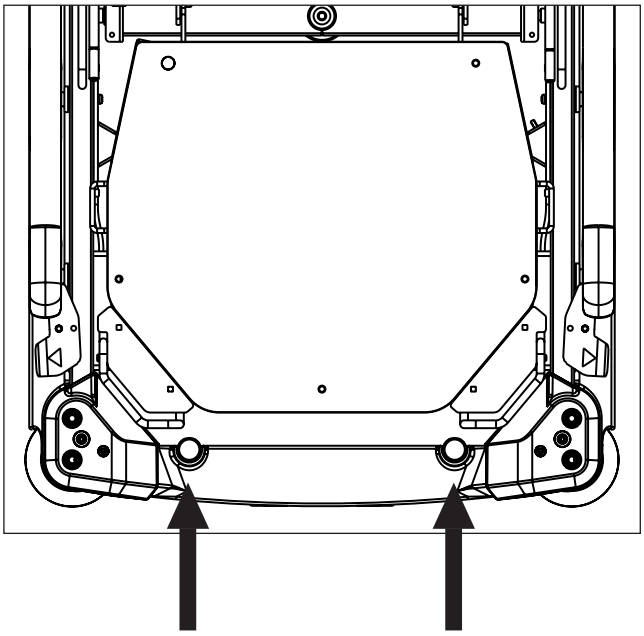

Fig. Positions for Paper Roll Holder

13.6 Storage Space

Storage Space is intended for patient´s things.
Storage Space is located under the Backrest.

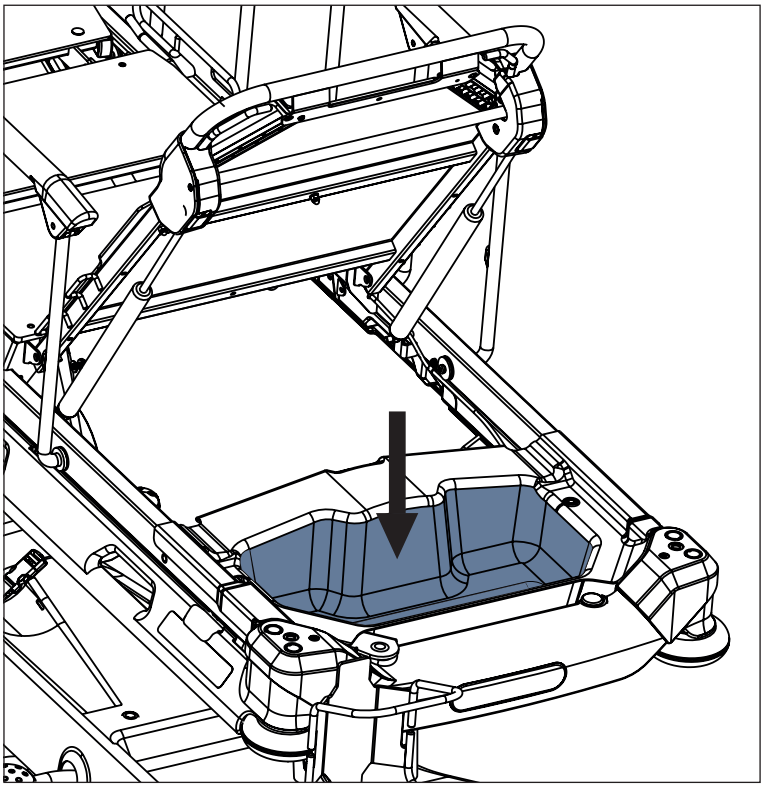

Fig. Storage Space (under the Backrest)

To clean the Storage Space:

► remove it from its place.

To perform X-Ray Examination under the Backrest:

► remove the Storage Space from its place.

13.7 Oxygen Bottle Holder

WARNING!
Risk of injury with Oxygen Bottle Holder due to incorrect use or due to careless driving!
► Ensure the Oxygen Bottle Holder is correctly fitted in correct position.
► It is necessary to place Oxygen Bottle Holder (with or without O2 bottle) before transport to secure transport position.
► Be aware of people or objects in close proximity when driving or manipulating the bed equipped with Oxygen Bottle Holder.
► Secure the oxygen bottles against falling or involuntary movement with rubber strap.
► Place the Oxygen Bottle Holder on the bed by following instructions.
► Ensure the oxygen bottle valve will not get damaged by careless or incorrect manipulation or placement.

Oxygen Bottle Holder is intended for transporting oxygen bottles with a weight of up to 15 kg and a volume of 5 litres.
Oxygen Bottle Holder with adapter is located at head end on the left.

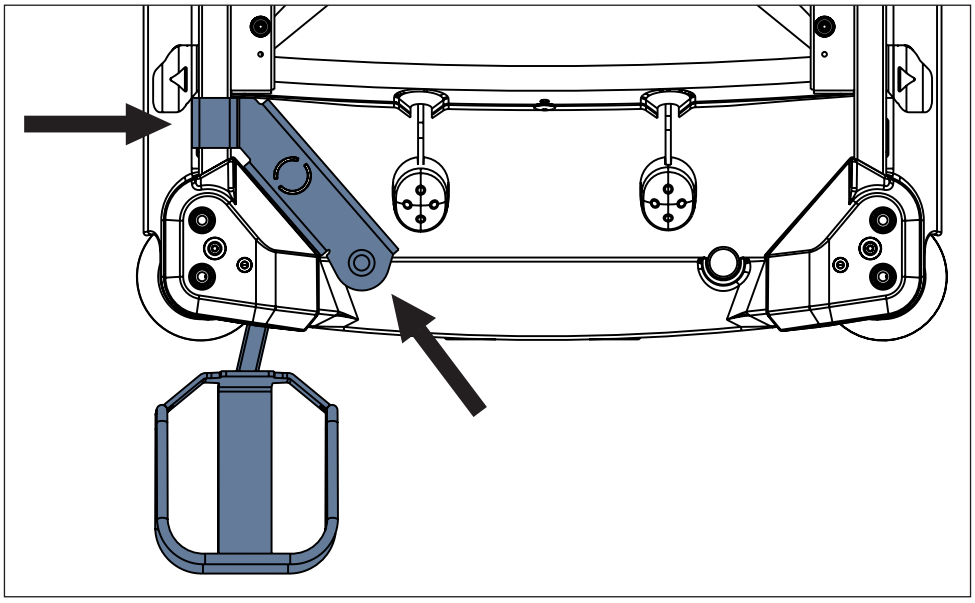

Fig. Placement of Oxygen Bottle Holder (head end)

To place the Oxygen Bottle Holder:

► Lift the Backrest.
► Place Oxygen Bottle Holder with adapter to designated positions on the frame of Mattress Support Platform.

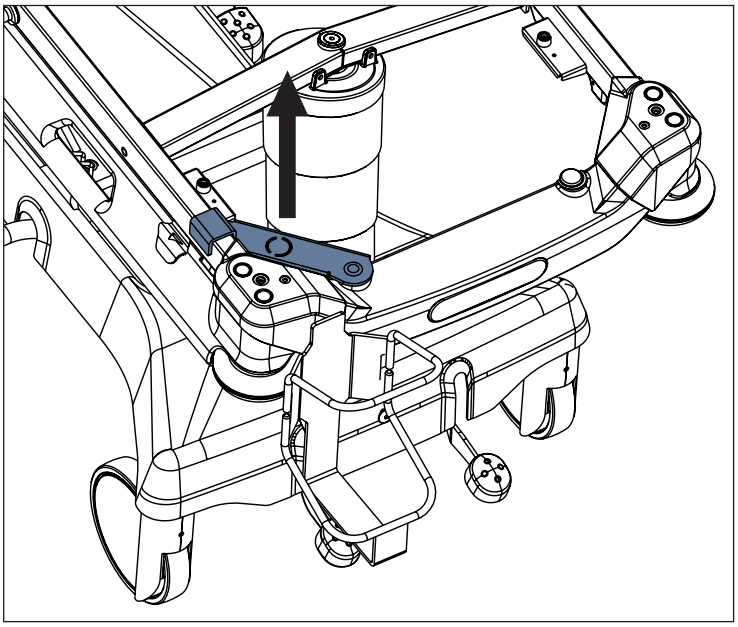

Fig. Removal of Oxygen Bottle Holder

To remove the Oxygen Bottle Holder:

► Lift the Backrest.
► Lift the part of Oxygen Bottle Holder which is attached to the frame of Mattress Support Platform.
► Lift the rest of Oxygen Bottle Holder through the frame of Mattress Support Platform.

To adjust position of the Oxygen Bottle Holder:

► Move Oxygen Bottle Holder to intended position.

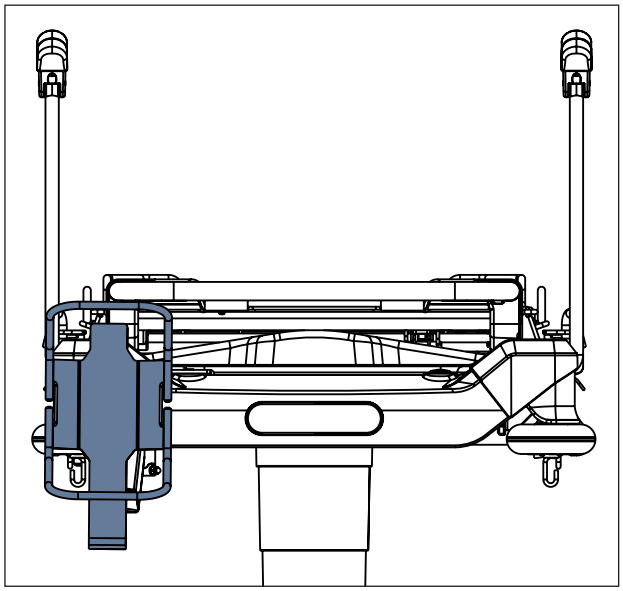

Fig. Oxygen Bottle Holder (at head end on the left) - position 1

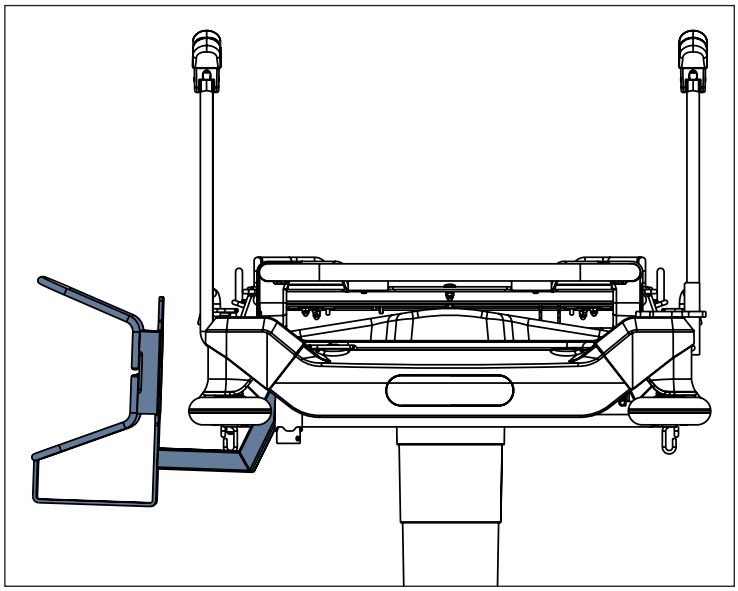

Fig. Oxygen Bottle Holder (at head end on the left) - position 2

13.8 X-Ray Cassette Holder (optional)

WARNING!
Respect maximum dimensions of x-ray cassettes!
► Maximum dimensions of any x-ray cassette for Adjustable X-Ray Cassette Holder are 47 cm x 46 cm x 2,2 cm!
► Maximum dimensions of any x-ray cassette for Fixed X-Ray Cassette Holder are 58 cm x 46 cm x 2,4 cm!

WARNING!
Safe Working Load for both types of the X-Ray Cassette Holder (Adjustable X-Ray Cassette Holder and Fixed X-Ray Cassette Holder) is 5 kg!
► Do not use any x-ray cassettes exceeding the Safe Working Load!

WARNING!
Prevent x-ray cassettes from being damaged!
► Do not leave any x-ray cassette in the Adjustable X-Ray Cassette Holder or in the Fixed X-Ray Cassette Holder if X-Ray Examination should not be performed!

CAUTION!
Prevent x-ray images from being devalued!
► Take x-ray images when the bed is braked and no part of the bed is forced to move!
► Follow the instructions in the instructions for use how to use the Adjustable X-Ray Cassette Holder and the Fixed X-Ray Cassette Holder!

WARNING!
Risk of collision with the other accessories!
► Accessory rail at head end is not compatible with both X-Ray Cassette Holders when Backrest is down!
► Accessory rail at foot end (only Sprint 100 with 2-part Mattress Support Platform) is not compatible with both X--Ray Cassette Holders!
► Both X-Ray Cassette Holders in the most remote position on the Backrest are not compatible with an oxygen bottle on the undercarriage cover!
► Storage Space is not compatible with x-ray cassettes in both X-Ray Cassette Holders when Backrest is down!

Mattress Support Platform Covers are x-ray translucent. The Sprint 100 with 2-part Mattress Support Platform can be equipped with an X-Ray Cassette Holder which can be inserted under the Backrest or under the Foot section. The Sprint 100 with 4-part Mattress Support Platform can be equipped with an X-Ray Cassette Holder which can be inserted just under the Backrest. This accessory allows taking x-ray images of the patient´s body parts without moving the patient manually. This procedure is above all suitable for patients who cannot be moved due to critical conditions (e. g. internal bleeding) or unstable patients. There are two types of the X--Ray Cassette Holder which are compatible with Sprint 100 (Adjustable X-Ray Cassette Holder and Fixed X-Ray Cassette Holder). The Adjustable X-Ray Cassette Holder and the Fixed X-Ray Cassette Holder are compatible with Sprint 100 with 2-part Mattress Support Platform and with Sprint 100 with 4-part Mattress Support Platform.

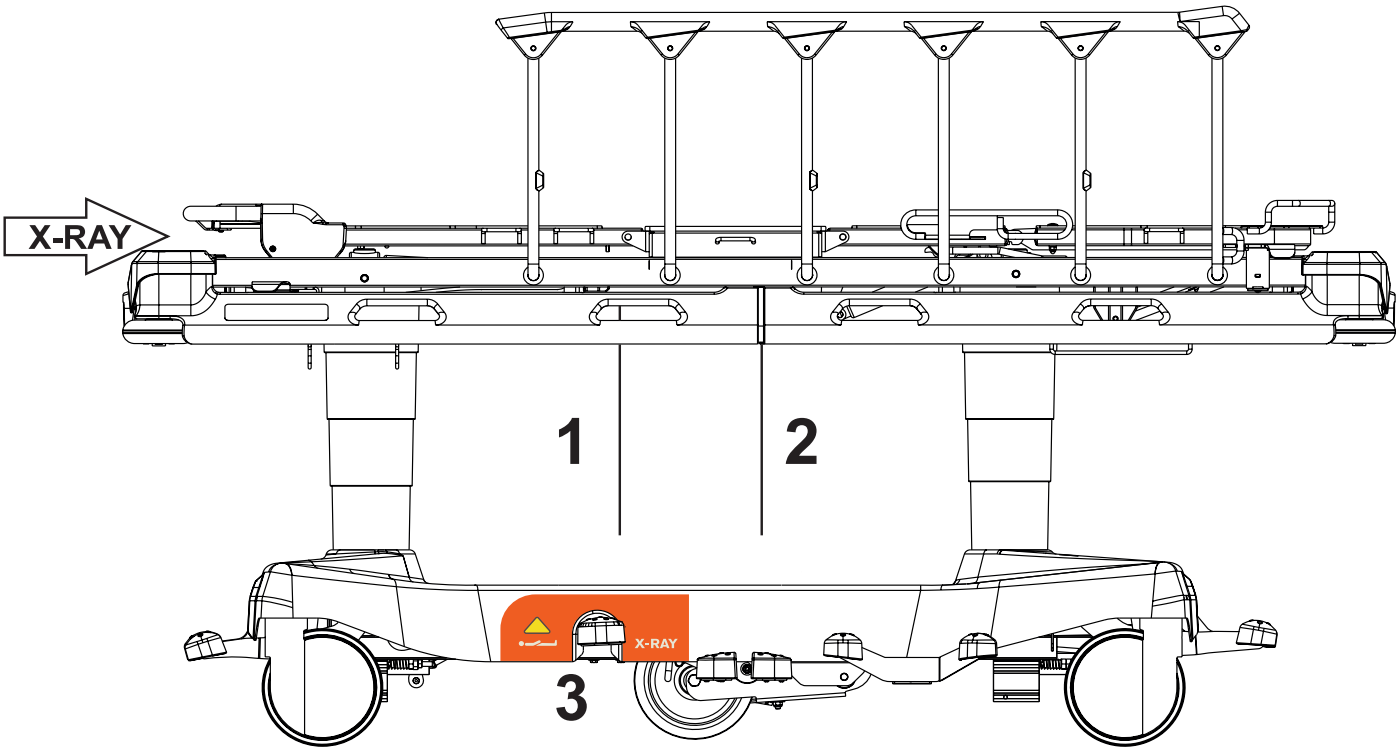

Fig. Sprint 100 with 4-part Mattress Support Platform (equipped with X-Ray Cassette Holder)

1. Strip indicating where the inserted X-Ray Cassette Holder ends (Standard Position)
2. Strip indicating where the inserted X-Ray Cassette Holder ends (The Most Remote Position)
3. Label indicating the bed is intended for X-Ray Examination

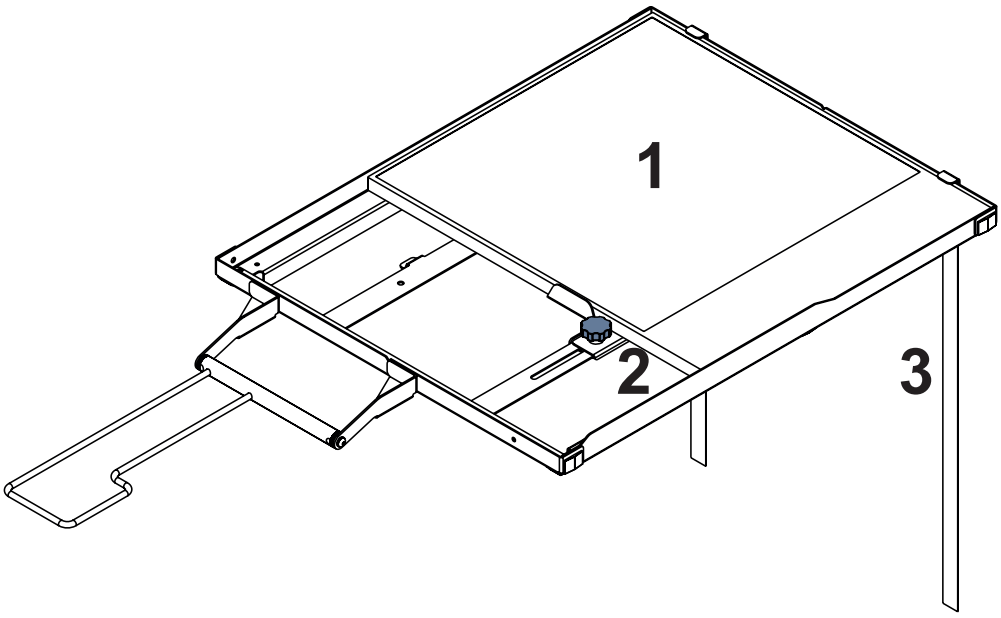

Adjustable X-Ray Cassette Holder

This X-Ray Cassette Holder can be adjusted for the x-ray cassettes with length from 30 cm to 47 cm.

To adjust this X-Ray Cassette Holder for a length of suitable x-ray cassette:
► adjust the Adjusting element (**2**) by turning.

1. X-ray cassette
2. Adjusting element
3. Strip indicating where the X--Ray Cassette Holder ends

Fig. Adjustable X-Ray Cassette Holder

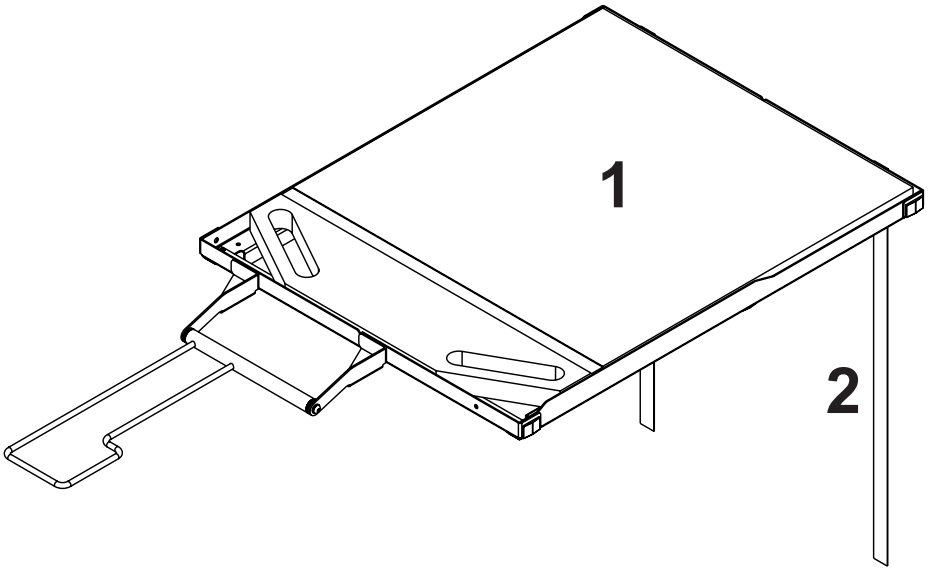

Fig. Fixed X-Ray Cassette Holder

Fixed X-Ray Cassette Holder

This X-Ray Cassette Holder can be used for the x-ray cassettes with length 58 cm.

1. X-ray cassette
2. Strip indicating where the X--Ray Cassette Holder ends

Positions of the X-Ray Cassette Holder

Both X-Ray Cassette Holders can be fixed in 4 positions under the Backrest and both of them can be pushed to the most remote position without restriction of the Backrest adjustment during X-Ray Examination. In the case of the Sprint 100 with 2-part Mattress Support Platform the both X-Ray Cassette Holders can be adjusted also under the Foot section without fixation or both of them can be pushed to the most remote position.

Standard Position

Prepared X-Ray Cassette Holder is placed in its standard position. In the standard position the X-Ray Cassette Holder is fixed under the Backrest in the first position (arrow on the picture).

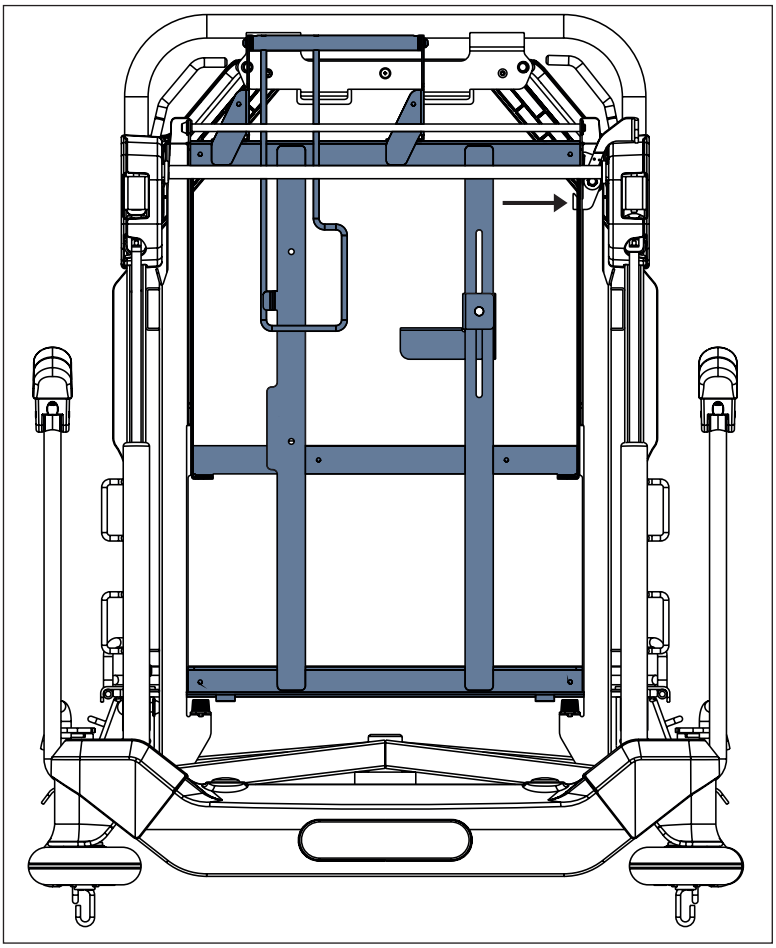

Fig. Standard position of X-Ray Cassette Holder (under the Backrest)

To change position of the X-Ray Cassette Holder:

- ► Press the catch towards the bed.
- ► Change position of the X-Ray Cassette Holder.
- ► Ensure the catch is inserted into the selected position of the X-Ray Cassette Holder.

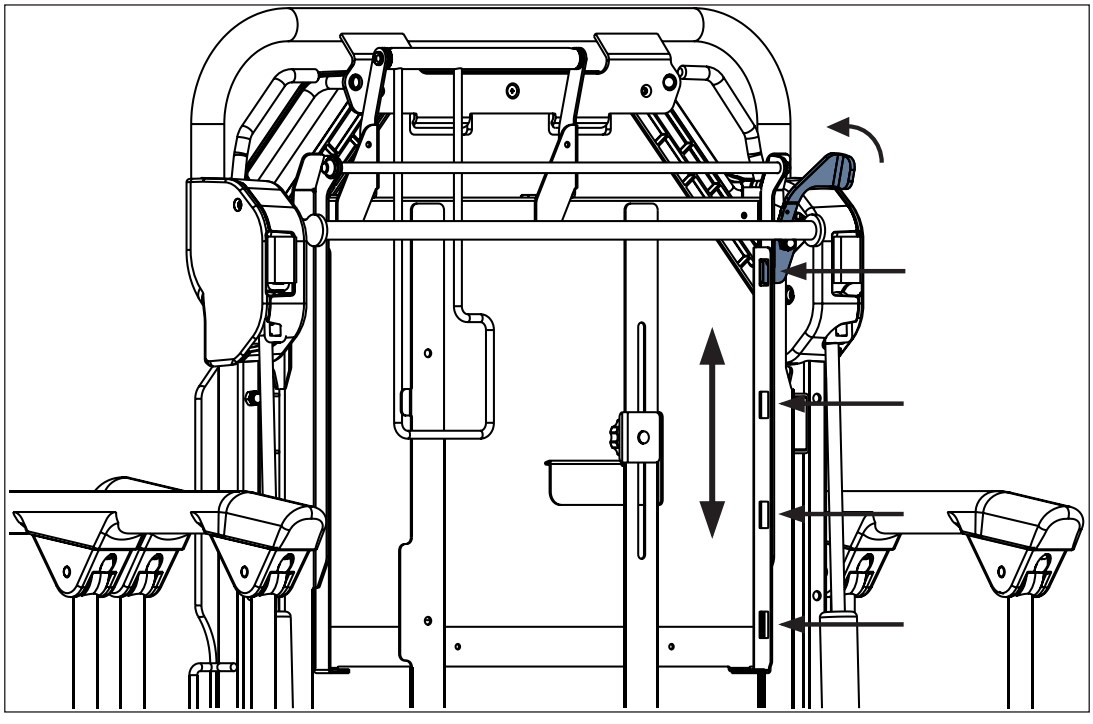

Fig. Catch inserted into the X-Ray Cassette Holder (under the Backrest)

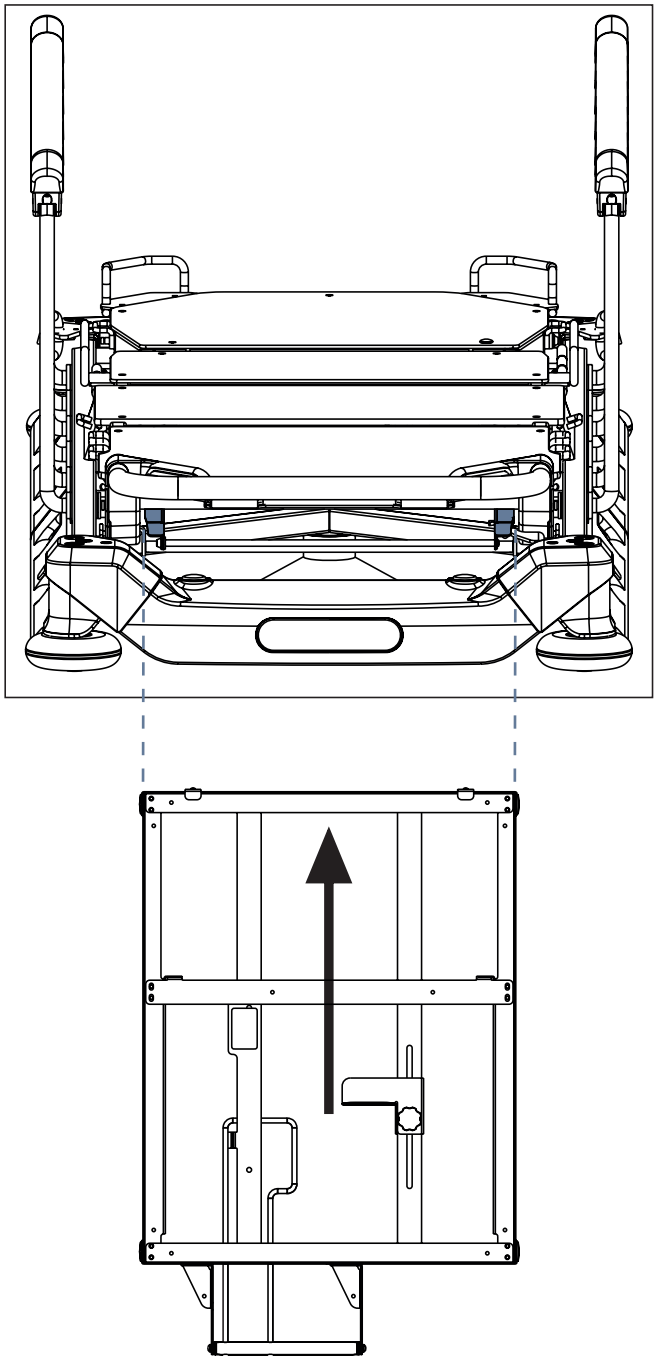

Fig. Adjustable X-Ray Cassette Holder under the Backrest (Sprint 100 with 4-part Mattress Support Platform)

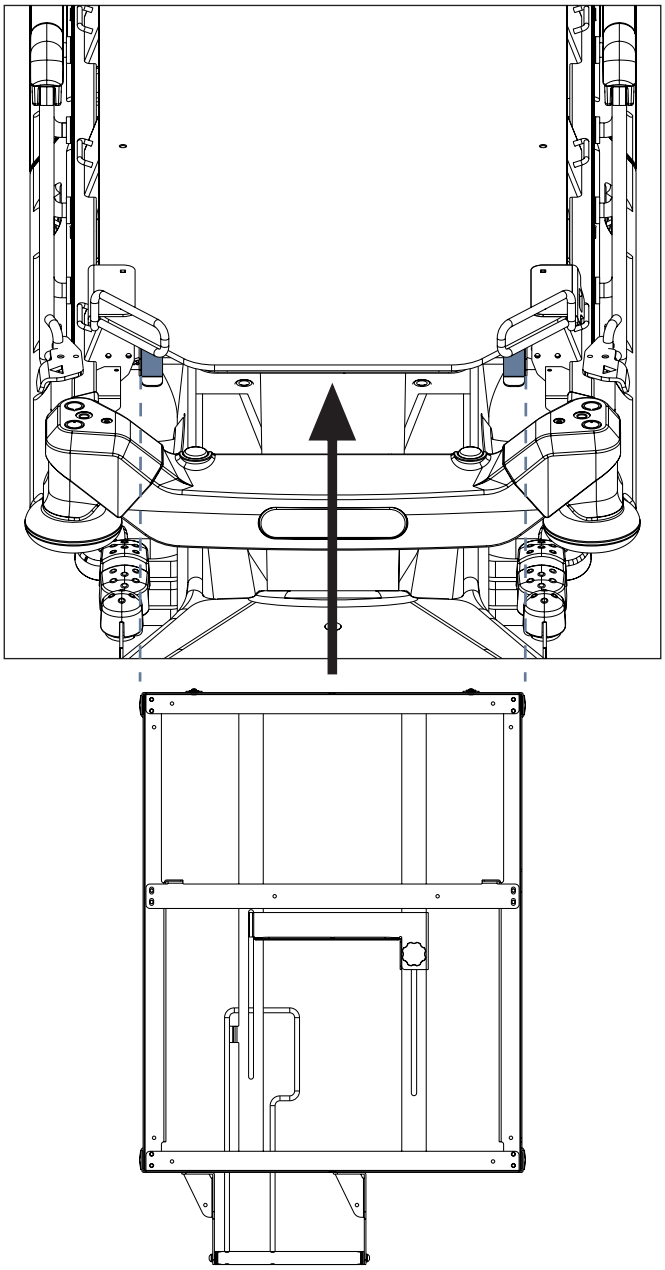

Fig. Adjustable X-Ray Cassette Holder under the Foot section (Sprint 100 with 2-part Mattress Support Platform)

To fix X-Ray Cassette Holder under the Backrest:

► Insert the rightly oriented X-Ray Cassette Holder into the intended holders under the Backrest.
► Ensure the catch is inserted into the selected position of the X-Ray Cassette Holder.

To fix X-Ray Cassette Holder under the Foot section:

► Insert the rightly oriented X-Ray Cassette Holder to the intended holders under the Foot section.

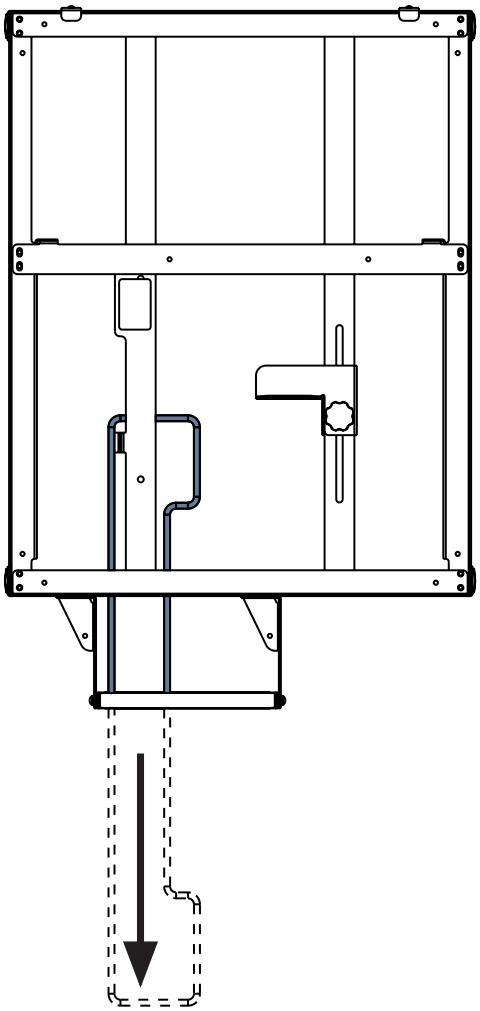

Fig. Extension of Adjustable X-Ray Cassette Holder (tilted position)

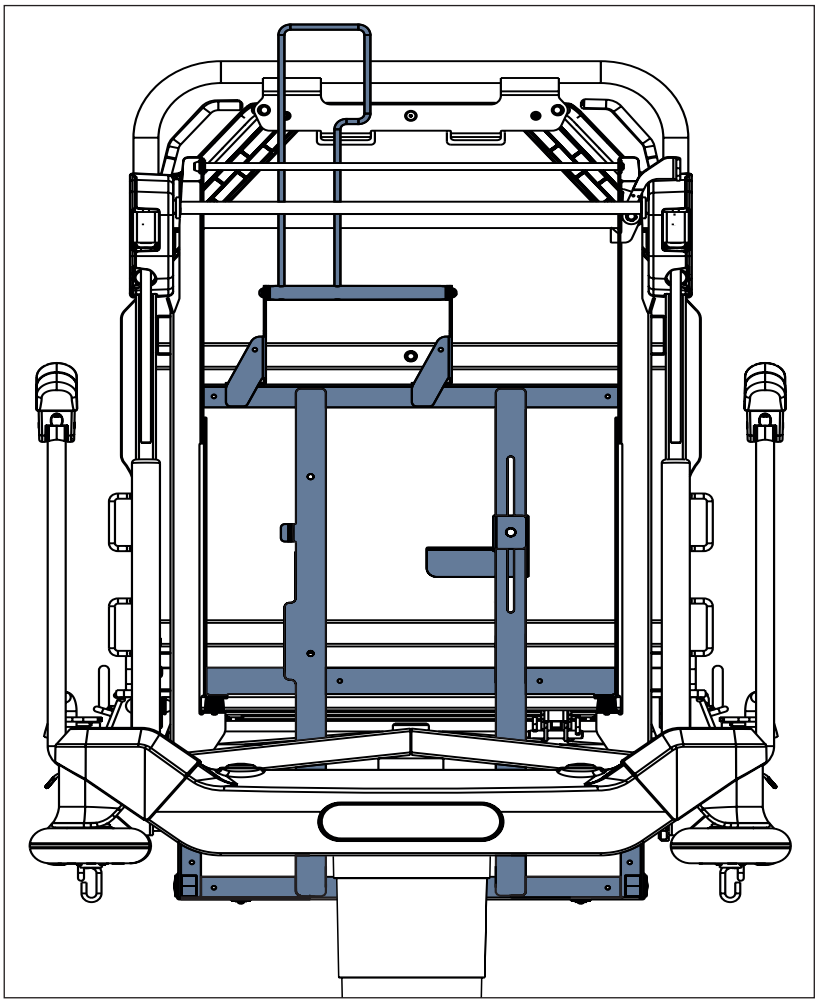

Fig. The most remote position of Adjustable X-Ray Cassette Holder (under the Backrest)

The Most Remote Position

► Tilt the extension of X-Ray Cassette Holder (Adjustable X-Ray Cassette Holder or Fixed X-Ray Cassette Holder) to extend the X-Ray Cassette Holder.
► Push the X-Ray Cassette Holder to the most remote position under the Backrest (or also under the Foot section in the case of Sprint 100 with 2-part Mattress Support Platform).
► Ensure the X-Ray Cassette Holder remains in its place.

13.8.1 Instructions for X-Ray Examination

► Make sure that patient is in the centre of bed.
► Make sure that Backrest is in the lowest position and siderails are raised up.
► Pull out X-Ray Cassette Holder.
► Insert the x-ray cassette (maximum dimensions 58 cm × 46 cm x 2,4 cm for the Fixed X-Ray Cassette Holder and 47 cm x 46 cm x 2,2 cm for the Adjustable X-Ray Cassette Holder) into the X-Ray Cassette Holder in the horizontal position. If the x-ray cassette has length from 30 cm to 47 cm, fix it with the adjusting element in the case of the Adjustable X-Ray Cassette Holder.
► Insert back the X-Ray Cassette Holder with x-ray cassette to the intended position under the Backrest (or also under the Foot section in the case of Sprint 100 with 2-part Mattress Support Platform).
► Adjust parameters of the x-ray device and do the image.

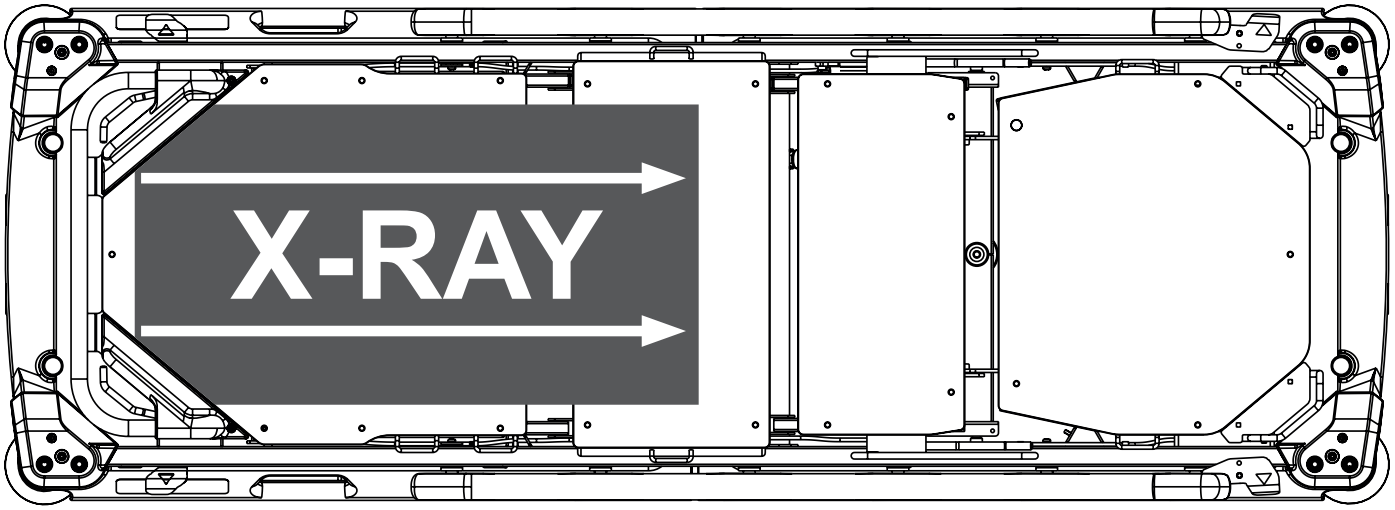

Fig. Scope of the X-Ray Examination under the Backrest (Sprint 100 with 4-part Mattress Support Platform)

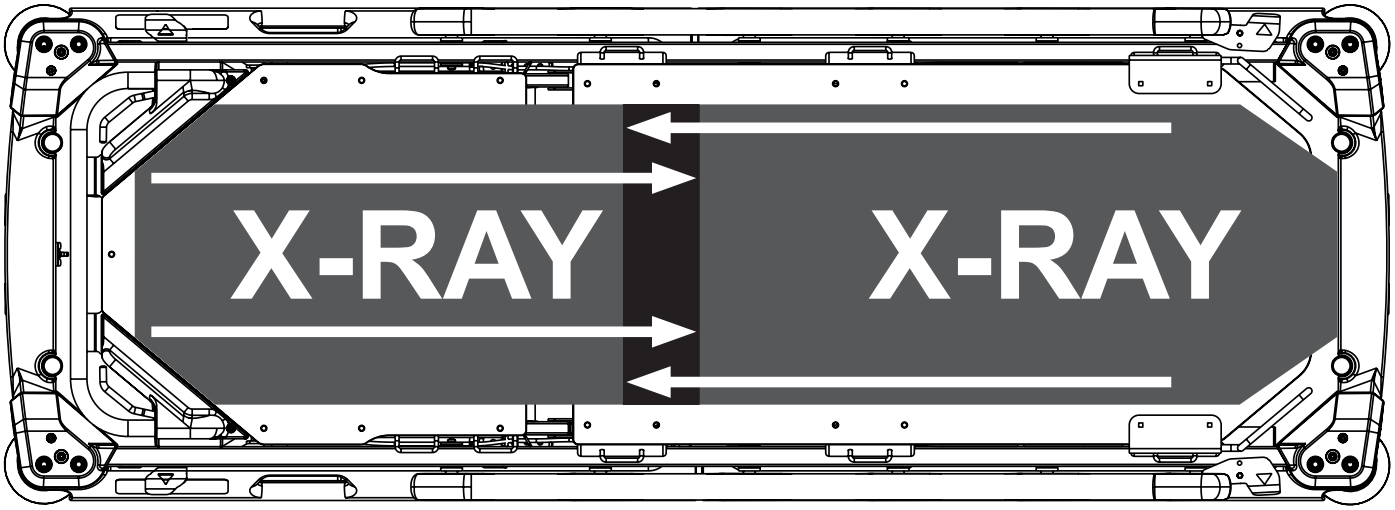

Fig. Scope of the X-Ray Examination under the Backrest and under the Foot section (Sprint 100 with 2-part Mattress Support Platform)

Scope of the X-Ray Examination (Sprint 100 with 2-part Mattress Support Platform)

It is possible to perform the X-Ray Examination under all parts of the Mattress Support Platform of the Sprint 100 with 2-part Mattress Support Platform because the both X-Ray Cassette Holders can be placed under the Backrest or under the Foot section.

14 Cleaning/Disinfection

WARNING!
Risk of injury due to accidental bed movement!
► Ensure pedals will not be pressed accidentally during cleaning.

WARNING!
If oil leaks from hydraulic units or gas springs contact the manufacturer´s service department!

CAUTION!
Material damage due to incorrect cleaning/disinfection!
► Do not use washing tunnels to clean the bed.
► Do not use pressure or steam cleaners.
► Follow the instructions and observe the dosages recommended by the manufacturer.
► Ensure that disinfectants are selected and applied exclusively by qualified hygiene experts.
► Respect used materials during cleaning and desinfection! For information see the following table.
► **Check if used cleaning agents and disinfectants are compatible with materials that the product consists of! For information see the following table.**

BED COMPONENTS THAT ARE INTENDED TO BE CLEANED Do not clean what is not mentioned in this column!	MATERIALS (SURFACES OF THE MENTIONED BED COMPONENTS) Competent user is responsible for check if used cleaning agents and disinfectants are compatible with mentioned materials!
Bed ends (Head end and Foot end)	Polypropylene (PP) + Lacquered steel
Siderails	Polypropylene (PP) + Lacquered steel
Mattress support platform cover (Backrest)	High Pressure Laminate (HPL)
Mattress support platform cover (Thighrest/Foot section)	High Pressure Laminate (HPL)
Mattress support platform cover (Calfrest)	only Sprint 100 with 4-part mattress support platform: High Pressure Laminate (HPL)
Seat section	only Sprint 100 with 4-part mattress support platform: High Pressure Laminate (HPL)
Castors	Polypropylene (PP)
Castor control levers, lifting levers with pedals, lowering levers with pedals	Polyamide (PA6) + Lacquered steel
Frame of the mattress support platform	Lacquered steel
Column covers	Polypropylene (PP)
Undercarriage cover	Acrylonitrile butadiene styrene (ABS)
Corner covers	Polypropylene (PP)
Covers of mattress support platform sides	Polypropylene (PP)
Corner bumpers	Polypropylene (PP)
Labels	BO319-transfer PET white top / S8002 / HF140 with lamination PP20 matt transparent
Accessory rails	Lacquered steel + Stainless steel
Fixed handles, Foldable handles	Lacquered steel
Foldable infusion stands	Lacquered steel + Stainless steel + Polypropylene (PP)

For safe and gentle cleaning:

► Do not use any strong acids or bases (optimum pH range 6 - 8).
► Exclusively use detergents that are suitable for cleaning medical equipment.
► Do not use abrasive powders, steel wool, or other materials and cleaning agents that might damage the mattress replace ment system.
► Never use any corrosive or caustic detergents.
► Never use detergents that deposit calcium carbonate.
► Never use detergents with solvents that might affect the structure and consistency of the plastics (benzene, toluene, acetone, etc.).
► Observe local directives regarding infection control.
► Make sure any cleaning agent used is approved by:
  ■ the facility in which the mattress replacement system is to be used.
  ■ by the environmental protection agency of the country in which the mattress replacement system is to be used.

14.1 Cleaning (Sprint 100)

Prepare for cleaning as follows:

► Put the Mattress Support Platform in the highest position.
► Adjust the Backrest and Thighrest/Foot section so that the reverse sides are accessible.
► Move the bed to the location where it will be cleaned.
► Lock the brakes on the bed.

14.1.1 Cleaning before Changing Patients

Clean the following bed parts:

■ All control elements for adjusting the bed
■ All handles
■ Bed ends
■ Siderails (in highest position)
■ Freely accessible mattress surface
■ Accessory rails

14.1.2 Daily Cleaning

Clean the following bed parts:

■ All control elements for adjusting the bed
■ All handles
■ Bed ends
■ Siderails (in highest position)
■ Freely accessible mattress surface
■ Accessory rails
■ All Mattress Support Platform covers
■ Plastic undercarriage covers
■ Column covers
■ Mattress on all sides
■ Freely accessible metal parts of Mattress Support Platform
■ Infusion stand sleeve fitting
■ Bumpers
■ Castors
■ Brakes

14.1.3 Complete Cleaning and Disinfection

Clean the following bed parts:

- All control elements for adjusting the bed
- All handles
- Bed ends
- Siderails (in highest position)
- Freely accessible mattress surface
- Accessory rails
- All Mattress Support Platform covers
- Plastic undercarriage covers
- Column covers
- Mattress on all sides
- Freely accessible metal parts of Mattress Support Platform
- Infusion stand sleeve fitting
- Bumpers
- Castors
- Brakes

15 Troubleshooting

Error/Fault	Cause	Solution
Faulty Mattress Support Platform Height Adjustment	Obstacle on the undercarriage cover	Remove the obstacle.
	Obstacle under the pedals	Remove the obstacle.
	Faulty pedal.	Notify the manufacturer´s service department.
Lowering Backrest from the upright position not possible	Obstacle under the Backrest or in the drive mechanism.	Remove the obstacle
	Backrest Release Handle is defective	Notify the manufacturer´s service department.
Adjusting Siderails not possible	Obstacle in the Siderail Release Mechanism	Remove the obstacle.
	Siderail Release Mechanism is defective.	Notify the manufacturer´s service department.
Faulty brakes	Obstacle blocking brakes mechanically	Remove the obstacle.
	The brake mechanism is defective	Notify the manufacturer´s service department

16 Maintenance

WARNING!
Risk of injury when working on the bed!
► Ensure that the castors are locked prior to installation, putting into service, maintenance and deinstallation.

WARNING!
Risk of injury due to defective bed!
► Have a defective bed repaired immediately.
► If the defect cannot be repaired, do not use the bed.

CAUTION!
Material damage due to incorrect maintenance!
► Ensure that maintenance is performed exclusively by manufacturer´s customer service or by authorised service personnel certified by the manufacturer.
► If the defect cannot be repaired, do not use the bed.

LINET ® recommends attaching the maintenance plaque to the bed.

16.1 Regular maintenance

► Check regularly movable parts for wear.
► Perform regularly visual check of the product (with delivery note if necessary).
► Ask service department of the manufacturer for addition of the original spare parts if some product parts are missing.
► Ask service department of the manufacturer for replacement of any damaged product parts by the original spare parts.
► Check regularly that all accessories are working properly.
► Replace damaged accessories immediately.

16.2 Spare Parts

The serial label is located on the frame of the mattress support platform. The serial label contains information for claims and ordering replacement parts.

Information about spare parts is available from:
■ Manufacturer´s customer service
■ Sales department

16.3 Safety Technical Checks

WARNING!
Risk of injury due to incorrect safety technical checks!
► Ensure that safety technical checks are performed exclusively by manufacturer´s customer service or by authorised service personnel certified by the manufacturer.
► Ensure that the safety technical checks are recorded in the service and maintenance log.

Safety technical check of the medical bed must be performed at least once every 12 months.

The procedure for performing the safety technical check is stipulated in EN 62353:2014.

NOTE On request, the manufacturer will provide service documentation (e.g. circuit diagrams, component part lists, descriptions, calibration instructions etc.) for service personnel for the repair of the equipment designated by the manufacturer as repairable by service personnel.

17 Disposal

17.1 Environment Protection

The company LINET® is aware of the importance of environmental protection for future generations. Within this company the environmental management system is applied in accordance with the internationally agreed standard ISO 14001. The compliance with this standard is annually tested by the external audit executed by an authorised company.

Materials used in this product are not environmentally hazardous. LINET® products meet valid requirements of national and European legislation in the areas of **RoHS** and **REACH**, so they do not contain any prohibited substances in excess quantities.
None of the wooden parts is made of tropical wood (such as mahogany, rosewood, ebony, teak etc.) or made of timber from the Amazon region or from similar rainforests. Product noise (sound pressure level) meets requirements of the regulations for the protection of public health against undesirable effects of noise and vibration in protected interior spaces of buildings (according to standard IEC 60601-2-52). Used packaging materials are in accordance with requirements of the Packaging Act (**Zákon o obalech**).
For disposal of packaging materials after installation of products contact your sales representative or manufacturer´s customer service about the possibility of a free take-back of packaging through an authorized company (more details on **www.linet.cz**).

17.2 Disposal

17.2.1 Within Europe

To dispose of the equipment:

- ► The equipment must not be disposed of as household waste.
- ► Dispose of this equipment at designated collection points or take-back points.

LINET® participates in a collective system with take-back company REMA System (see **www.remasystem.cz/sberna-mista/**).
By bringing electric and electronic equipment to a take-back point, you participate in recycling and you save primary raw material resources while protecting your environment from effects of unprofessional disposal.

17.2.2 Outside Europe

- ► Dispose of the product or its components in accordance with local laws and regulations!
- ► Hire an approved waste disposal company for disposal!

18 Warranty

LINET ® will only be held responsible for the safety and reliability of products that are regularly serviced, maintained and used in accordance with the safety guidelines.

Should a serious defect arise that cannot be repaired during maintenance:

- ► Do not continue to use the bed.

This product is covered by a 24-month warranty from the date of purchase. The warranty covers all material and manufacturing-related failures and errors. Failures and errors caused by incorrect use and external effects are not covered. Justified complaints will be fixed free of charge during the warranty period. Proof of purchase, with the date of purchase, is required for all warranty service. Our standard terms and conditions apply.

19 Standards and Regulations

Apllied norms are stated on Declaration of Conformity.

The manufacturer adheres to a certified quality management system in compliance with the following standards:

- ■ **ISO 9001**
- ■ **ISO 14001**
- ■ **ISO 13485**
- ■ **MDSAP (Medical Device Single Audit Program)**